TAHOE 4x4 SPECIAL SERVICE

Fully accessible underbody spare tire standard

Shown with aftermarket equipment and Kerr-installed Push-To-Talk steering wheel controls

Shown with aftermarket equipment and Kerr-installed Push-To-Talk steering wheel controls

UPDATES FOR 2015

NEW STANDARD FEATURES

- All-new exterior with aluminum hood and lift gate
- All-new interior
- All-new EcoTec3 5.3L V8 (355 hp, 383 lb-ft of torque)
- Autotrac 2-speed electronic transfer case
- Dual isolated batteries (primary and auxiliary)
- Heavy-duty locking rear differential
- Electric Power Steering
- Heavy-duty Trailering equipment with universal wiring
- Rear Vision Camera with Rear Park Assist
- Bluetooth[1] cell phone connectivity (requires OnStar hardware)
- OnStar[2] with Directions and Connections plan (6 months free)
- Surveillance Mode connection
- USB[3] ports, 12-volt outlets (4), and SD card reader
- 110-volt, 3-prong outlet located in lower center stack
- New key design with separate remote FOB
- Programmable door locks (via radio interface)
- Theft Deterrent System
- Rain-sensing front wipers with hidden rear window wiper
- Cloth second row seating with fold-down arm rest
- Increased front head room (maximum of 42.8 inches)
- Increased front leg room (maximum of 45.3 inches)
- Increased front hip room (maximum of 60.8 inches)
- Increased payload to maximum[4] 1,765 lbs with standard 40/20/40 seat and 1,794 lbs with optional 40/40 seat

NEW OPTIONAL FEATURES

- Driver Alert Package (PCW) including Forward Collision Alert, Lane Departure Warning, Safety Alert Seat, and power-adjustable pedals
- Power-adjustable pedals (JF4, included with Driver Alert Package)
- Center front seat delete (9U3)
- Front bucket seats (A95) with integrated, retail-style center console and driver seat inboard airbag[5]
- Vinyl rear seating (5T5)
- Frame-mounted front recovery tow hooks (V76)
- Solar absorbing, non-tinted glass in rear doors and cargo area (AKP)
- Remote vehicle start (BTV)
- Ground studs (UT7) in rear compartment
- Splash guards (VQK)

1 The Bluetooth word mark is a registered trademark owned by Bluetooth SIG, Inc. and any use of such mark by GM is under license. Go to www.gmtotalconnect.com to find out which Bluetooth phones are compatible with the vehicle.

2 Visit onstar.com for coverage map, details and system limitations. OnStar acts as a link to existing emergency service providers. Services vary with model and conditions. Available on select iPhone,® Android™ and BlackBerry® devices. Services vary by phone, vehicle and conditions. Requires active OnStar subscription. Not available in certain areas. Visit onstar.com for coverage map, details and system limitations. Ability to locate stolen vehicles and remote door unlock success varies with conditions.

3 Not compatible with all devices.

4 Maximum payload capacity includes weight of driver, passengers, optional equipment and cargo.

5 Always use safety belts and the correct child restraint for your child's age and size, even in vehicles equipped with air bags. Even in vehicles equipped with Passenger Sensing System, children are safer when properly secured in a rear seat in an appropriate infant, child or booster seat. Never place a rear-facing infant restraint in the front seat of any vehicle equipped with an active frontal air bag. See your vehicle Owner Manual and child safety seat instructions for more information.

NOTE: The four-wheel drive Tahoe Special Service (5W4) offers you support in general utility for off-road and non-pursuit operations. GM restricts the sale of police vehicles and they are not to be sold to retail customers. Model CK15706 (four-wheel drive) with equipment group 1FL is required when ordering 5W4 Special Service package. Two-wheel drive model is not available.

	STANDARD 5W4 INTERIOR FEATURES
AIR CONDITIONING, REAR	Tri-zone with dash-mounted, independent, digital settings for driver, front-passenger, and rear occupants (driver controlled)
ASSIST HANDLES	Front passenger and second row outboard; front passenger assist handle is deleted when passenger side spotlamp is ordered
BACK-UP CAMERA	Displayed in radio screen
BACK-UP SENSORS	Rear Park Assist with audible warning
BLUETOOTH	Bluetooth[1] cell phone connectivity (deleted when UE0 OnStar delete is ordered)
COMPASS	Displayed in Driver Information Center see page 10 (Compass is deleted when UE0 OnStar Delete is ordered)
CONSOLE, OVERHEAD	Includes conversation mirror and sunglass holder with map lights and passenger airbag indicator
CRUISE CONTROL	Electronic with set and resume speed
FLOOR COVERING	Black rubberized vinyl floor and load floor behind second row seats, for illustrations see page 21 (carpeting and carpeted floor mats are available, see option B30 and B58 on page 12)
GLASS	Deep-tinted, all windows (except for windshield, and driver/front-passenger side glass which are light-tinted) Non-tinted, solar absorbing glass available (see option AKP on page 12)
GLOVE BOX	Locking door without courtesy light (uses ignition key)
LIGHTING	Interior LED with courtesy lights, door handle or remote entry activated, illuminated entry and map lights
MIRROR	Inside, rearview, manual day/night
NAVIGATION	Available only with active OnStar[2] account that includes Turn-by-Turn directions plan directions are displayed as text on radio. Does not include map view navigation screen.
ONSTAR[2]	6 months of Directions and Connections plan, see information on page 22 (visit onstar.com for coverage map, details and system limitations) **NOTE: Activation of an OnStar account requires the request of customer to initiate once vehicle is received**
OUTSIDE TEMPERATURE	Displays in top right corner of radio screen (see page 11)
RADIO	AM/FM stereo with CD player and auxiliary input jack, includes 4.2 inch radio screen, USB-ports and SD card reader, MP3 player and 6-speaker system (see page 11)
RESTRAINT SYSTEM	Three point safety belts, driver and front passenger with pretensioners, dual stage driver and front passenger frontal air bags, front passenger sensing system with frontal airbag ON/OFF indicator, rollover sensor, dual head curtain air bags for front and second row outboard occupants[3] and front seat-back mounted thorax-pelvic air bags; head curtain air bag extends to cargo area
SEATS, FRONT	CLOTH 40/20/40 individual seats, 3 passengers with 10-way power driver seat adjuster (fore/aft, up/down, tilt, recline, and lumbar), and 6-way power passenger seat adjuster. Adjustable outboard head restraints and storage pockets. Center seat section can be deleted (9U3) for 15" of open floor space (see options on page 9).
SEAT, REAR	CLOTH split-folding 60/40 bench seats includes folding center armrest with cup holders and outboard seating position headrests. (Vinyl 2nd row seat option 5T5) 3rd row seats not available (see seating options on page 9)
SPEEDOMETER/CLUSTER	Digital Speedometer and 140 mph analog speedometer, 1 mph increments and digital trip odometer with gauges for engine oil pressure, fuel, battery volts, coolant temperature and tachometer. Driver Information Center displays engine hours, warnings, and backup sensor proximity status while in reverse (see message listing on page 10 of additional features).
STEERING WHEEL	Tilt-wheel with cruise control and column mounted gear shift lever. (Vehicles equipped with safety alert package will also have wheel mounted sensitivity on/off controls)
SURVEILLANCE FEATURE	Body Control Module calibration is available to disable all automatic interior and exterior lighting. Feature requires connection to BCM by customer. Feature operates with or without SEO 9G8, delete Daytime Running Lamps and Automatic Headlamps. (see Interior/Exterior Lamps Control, page 20)
THEFT DETERRENT SYSTEM	Vehicle PASS-Key® III+ and Content Theft (unauthorized entry, or entry without remote unlock will sound horn and flash lamps). Option UTQ must be ordered for content theft disable
VISORS	Padded with cloth trim, extends on rod; driver and front passenger illuminated vanity mirrors
WARNING TONES	Headlamp on, key-in-ignition, driver and right-front passenger safety belt unfasten, backup sensor with warning tone and turn signal on
WINDOW OPERATION	Power with driver express up/down and lockout features

1. The Bluetooth word mark is a registered trademark owned by Bluetooth SIG, Inc. and any use of such mark by GM is under license. Go to gm.com/bluetooth to find out which Bluetooth phones are compatible with the vehicle.
2. Visit onstar.com for coverage map, details and system limitations. OnStar acts as a link to existing emergency service providers. Services vary with model and conditions. Available on select iPhone,® Android™ and BlackBerry® devices. Services vary by phone, vehicle and conditions. Requires active OnStar subscription. Not available in certain areas. Visit onstar.com for coverage map, details and system limitations. Ability to locate stolen vehicles and remote door unlock success varies with conditions.
3. Always use safety belts and the correct child restraint for your child's age and size, even in vehicles equipped with air bags. Even in vehicles equipped with Passenger Sensing System, children are safer when properly secured in a rear seat in an appropriate infant, child or booster seat. Never place a rear-facing infant restraint in the front seat of any vehicle equipped with an active frontal air bag. See your vehicle Owner Manual and child safety seat instructions for more information.

	STANDARD 5W4 EXTERIOR FEATURES
ASSIST STEPS	Black, mounted between front and rear wheels
BODY SIDE MOLDINGS	Optional (see option RWK on page 12)
DEFOGGER	Electric, rear window
DOOR HANDLES	Body color
DOOR LOCKS	Power, programmable with lockout protection and automatic locking/unlocking. Door locks can be programed via radio settings menu (see page 11). Lock cylinder not available on passenger front door or rear liftgate. Child safety door and window locks individually controlled electronically by driver door mounted switches. Includes 2 remote transmitters.
FASCIA, FRONT	Body color with police specific lower extension for increased brake cooling and ground clearance
FASCIA, REAR	Body color with step pad
FOG LAMPS	Not available
HEADLAMPS	Dual halogen composite with flash-to-pass feature, automatic exterior lamp control and daytime running lamps. Daytime running lamps are low beam lamps and operate at a reduced intensity (to delete automatic lamp control see option 9G8 on page 12).
HORNS	Dual note
KEYS	Two-sided, random code, for ignition, driver door, and glove box (Fleet keyed-a-like is available; see option 6E2 and 6E8 on page 12). Six additional keys available; see option 5HP on page 12.
KEYLESS ENTRY REMOTES	Includes two extended-range transmitters with non-functional panic button; stealth mode feature includes exterior lamps and horn disable; if remote start Option AP3 is included, running lamps will remain illuminated (additional transmitters are available; see option AMF on page 12)
LUGGAGE RACK	Not available
MIRRORS	Outside heated power-adjustable, manual-folding, body color with driver side spotter mirror
REAR LIFTGATE	Manual open/close with liftgate/liftglass latch exterior release switch or release via remote fob
REAR PARK ASSIST	Sensors on rear bumper to assist with parking and avoiding objects while in reverse. (See page 22)
REAR VISION CAMERA	Audible warning with rear camera view radio screen display (see page 22 for description)
UNDER HOOD LAMP	Not available
WINDSHIELD	Solar absorbing shaded upper with acoustic laminated glass
WINDSHIELD WIPERS	Intermittent, with rain sensing
	STANDARD 5W4 ELECTRICAL FEATURES
AUXILIARY POWER, FRONT	170-amp ignition and main power supply wiring at lower center of instrument panel: 120-amp ignition controlled relay power and 50- amp battery power (see wiring provisions for 12-volt battery power supply on page 27)
AUXILIARY POWER, REAR	100-amp cargo area (auxiliary battery powered) (see page 19)
LOCK-OUT PROTECTION	Prevents the power door locks from locking the driver's door if the keys are left in the ignition (manually lockable with engine running)
POWER OUTLETS	4 auxiliary, 12-volt outlets including one on the instrument panel, one in the center, fold-down seat storage, and two in the cargo area. Battery power is present at all times. Also has a 3-prong, 110-volt outlet located in the lower center stack. A 110 volt ac, 150 watt, outlet is adjacent to the 12 volt dc auxiliary power outlet in the lower center instrument panel
WIRING DIAGRAMS	See Wiring Section for description (pages 26 - 30); also see Tahoe Police Package owner's manual supplement (located in glove box folder with standard owner's manual)

	STANDARD 5W4 CHASSIS FEATURES
AIR CLEANER	High-capacity
ALTERNATOR	170-amp high output with idle boost (transmission in park or neutral) based on battery energy level (see page 16 for alternator output graph)
AXLE	3.08 Ratio with heavy-duty locking differential
BATTERIES	Primary 660 CCA, 80 amp-hour rating with battery rundown protection (may be configured to protect customer installed equipment). Auxiliary 730 CCA, 80 amp-hour battery without battery run-down protection for customer installed equipment (see page 15 for specifications)
BRAKES	Heavy-duty 4-wheel anti-lock front and rear disc with vacuum boost power assist
COOLING	Heavy-duty high-capacity radiator, electric fans and extended life coolant; coolant hoses are EPDM (ethylene-propylene-diene monomer) rubber; silicone hoses are not required (coolant is DEX-COOL good for 5 years/150,000 miles, protects from -34° F to +265° F and against rust and corrosion)
ENGINE	5.3L EcoTec3 V8 with direct injection, variable valve timing (VVT), Active Fuel Management (AFM), aluminum block, and FlexFuel capability (gasoline or E85[1] ethanol); top speed fuel cut-off at 112 mph; includes air conditioning wide open throttle cut off (see page 7 for powertrain description and emissions, see page 16 for specifications)
FRAME	Full perimeter, modular with hydroformed rails (includes ground straps)
FUEL TANK CAPACITY	26 gallon (98 liters)
HILL START ASSIST	This feature is designed to prevent the vehicle from rolling, either forward or rearward, during vehicle drive off. After the driver completely stops and holds the vehicle in a complete standstill on a grade, HSA will be automatically activated. During the transition period between when the driver releases the brake pedal and starts to accelerate to drive off on a grade, HSA holds the braking pressure for a maximum of two seconds to ensure that there is no rolling. Brakes will automatically release when the accelerator pedal is applied within the two-second window.
OIL COOLERS	Engine oil, oil-to-coolant heat exchanger in passenger side of coolant radiator. Transmission oil, oil-to-coolant heat exchanger in driver side of coolant radiator with auxiliary transmission air-to-oil cooler in upper portion of the AC condenser (see page 21 for illustration).
PROP SHAFT	4 inch diameter aluminum
RADIO SUPPRESSION	Grounding straps, at five locations (see page 20 for locations)
REAR DIFFERENTIAL	Heavy-duty locking
SPARK PLUGS	Extended life - iridium tip
STABILITRAK	An advanced computer controlled stability enhancement system assists the driver with directional control of the vehicle in difficult driving conditions. (see page 38 for details)
STEERING	Electric power-assisted rack and pinion (for illustration see page 21)
SUSPENSION, FRONT	Coil-over-shock with stabilizer bar
SUSPENSION, REAR	Multi-link with coil springs with stabilizer bar
TIRES	All-season P255/70R17 blackwall (see page 13 for additional wheel and tire options)
TIRE PRESSURE MONITOR	Check tire pressure will display in driver message center; also displays individual tire pressure (see page 19)
TIRE, SPARE	Full-size spare, lockable with outside winch-type carrier mounted under frame at rear
TRAILERING EQUIPMENT	SAE Class II hitch. Trailer may weigh up to 6,300 pounds with proper hitch selection. 8,400 lb Max Trailering Package (NHT) optional. See the Owners Manual for additional information.
TRANSMISSION	Enhanced calibration 6-speed automatic with overdrive and tow/haul mode. Electronically-controlled transmission provides protection against over-revving the engine in low gear and a mechanical low gear blockout is not required; if a driver manually selects low gear and fails to manually upshift to high gear, the powertrain control module automatically protects the drivetrain.
TRANSFER CASE	Autotrac, 2-speed electronic with rotary control, includes neutral position for dinghy towing (2HI, 4AUTO, 4HI, 4LO, and Neutral setting)
UNDERBODY SHIELD, FRONT	Two piece heavy-duty aluminum front underbody shield starting behind front bumper and running to 2nd cross-member protecting front underbody and oil pan (for illustration see page 21)
WARRANTY	See page 39 for Maintenance and Warranty information
WHEELS	17" Grey finished steel wheel
WHEEL CENTER CAP	Argent plastic

1. E85 is 85% ethanol and 15% gasoline.

POWERTRAIN

ENGINE				TRANSMISSION		AXLE	
OPTION CODE	TYPE	DISPLACEMENT LITERS/CU. IN.	FUEL SYSTEM	OPTION CODE	TYPE	OPTION CODE	RATIO
L83	V8	5.3/325	Active fuel management FlexFuel[1] (gas or E85 ethanol)	MX0/MYC	6L80 6-speed auto. with OD	GU4	3.08

EMISSIONS - MUST BE SPECIFIED

FE9	**FEDERAL EMISSIONS.** Federal requirements
YF5	**CALIFORNIA EMISSIONS.** California state requirements
NE1	**CT/DE/ME/MD/MA/NJ/NY/OR/PA/RI/VT/WA EMISSIONS.** Connecticut, Delaware, Maine, Maryland, Massachusetts, New Jersey, New York, Oregon, Pennsylvania, Rhode Island, Vermont and Washington state requirements
NB8	**EMISSIONS OVERRIDE**. California (allows a dealer in states that require California emissions - California, Connecticut, Delaware, Maryland, Massachusetts, New Jersey, New York, Oregon, Pennsylvania, Rhode Island or Washington - to order Federal emissions for a vehicle that will be registered in a state that has Federal emission requirements). Do not use for vehicles that will be registered in California, Connecticut, Delaware, Maryland, Massachusetts, New Jersey, New York, Oregon, Pennsylvania, Rhode Island or Washington. **Requires (FE9) Federal emissions requirements. Not available in Maine or Vermont.**
NB9	**EMISSIONS OVERRIDE**. state-specific (for dealers ordering vehicles in (YF5) or (NE1) emission states - California, Connecticut, Delaware, Maine, Maryland, Massachusetts, New Jersey, New York, Oregon, Pennsylvania, Rhode Island, Vermont and Washington). **Allows a California dealer (YF5 emissions) to order (NE1) emissions with (NB9) emissions override code for registration in (NE1) states; or, a Connecticut, Delaware, Maine, Massachusetts, New Jersey, New York, Oregon, Pennsylvania, Rhode Island, Vermont and Washington dealer (NE1 emissions) to order (YF5) emissions with (NB9) emissions override code for registration in California.**
NC7	**NC7 EMISSIONS OVERRIDE.** Federal (for vehicles ordered by dealers in Federal emission states with (YF5) or (NE1) emissions - Not required for vehicles being shipped to California, Connecticut, Delaware, Maine, Maryland, Massachusetts, New Jersey, New York, Oregon, Pennsylvania, Rhode Island, Vermont or Washington) **Requires (YF5) California state emissions requirements or (NE1) Connecticut, Delaware, Maine, Massachusetts, New York, Pennsylvania, Rhode Island or Vermont state emissions requirements**
NOTE:	The 2015 Chevrolet Tahoe Police Patrol Vehicle and Special Service Vehicle with the 5.3L Engine (L83) with Emission Option Codes FE9, NE1 and YF5 is certified to EPA Tier 2 Bin 4 standards and qualifies as ULEV (Ultra Low Emission Vehicle) under California Air Resources Board (CARB) requirements, meaning it is 50-state certified. Emission Standard: BIN4 EPA engine family or test group: FGMXT05.3382

1. E85 is 85% ethanol and 15% gasoline.

TIRES S-SPEED RATED

MANUFACTURER	QUANTITY	SIZE	SPEED RATING	TYPE
Random	5	P255/70R17	S	All season BW

NOTE: Due to specific requirements for performance durability and safety, GM recommends only the original equipment tires for replacement
Tire Plys = Tread: 2 Polyester, 2 Steel, 2 Nylon Sidewall: 2 Polyster Total 8 Ply

Tire chains may be used with caution. See your owner's manual for specific recommendations regarding conditions. If the vehicle is equipped with a P265/60R17 tire size, use tire chains only where legal and only when necessary. Use low profile chains that add no more than 12 mm thickness to the tire tread and inner sidewall. Use chains that are the proper size for the tires. Install them on the tires of the rear axle. Don't use chains on the tires of the front axle. Tighten them as tightly as possible with the ends securely fastened. Drive slowly and follow the chain manufacturer's instructions. If the chains contact the vehicle, stop and retighten them. If the contact continues, slow down until it stops. Driving too fast or spinning the wheels with chains on will damage the vehicle.

AVAILABLE EXTERIOR COLOR *Actual colors may vary*

GWT	GAN	GBA	GXG	GAZ	GBE	G7U
Champagne Silver Metallic	Silver Ice Metallic	Black	Tungsten Metallic	Summit White	Crystal Red Tintcoat*	Sable Metallic*

*Requires additional charge

SEO PAINT AVAILABLE

COLOR DESCRIPTION	SEO CODE	WA#
Blue[1]	9V2	WA-5665
Woodland Green	9V5	WA-9015
Victory Red[2]	5T4	WA-9260
Yellow	—	WA-9414
Wheatland Yellow	9W3	WA-253A
Dark Toreador Red	—	WA-334D
Dark Blue Metallic[1]	9V7	WA-722J

1 – Includes two openings in front fascia. Recovery hooks (V76) recommended for customers not installing after-market push bars.
2 – Extra Cost (Requires SEO 5T4 exterior body colored parts and Optional V76 Recovery Hooks)

AVAILABLE INTERIOR COLOR *Actual colors may vary*

HOU	5T5
Black Cloth	Black Vinyl

FRONT SEATS AND INTERIOR TRIM

STANDARD

Cloth front 40/20/40 Individual Seats (AZ3) 3-Occupant, Center seat can be unbolted for removal. Center fold-down armrest with USB/SD input and lockable seat cushion storage. STANDARD 10-way power driver seat, includes power lumbar and power recline. STANDARD 6-way power front passenger seat. Outboard seat back thoracic-pelvic airbags.

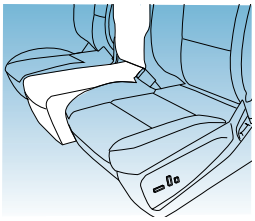
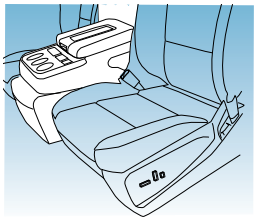
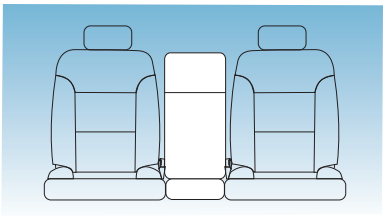

Seat Code	Seat Trim	Color	Color Code
AZ3	Cloth	Jet Black	HOU

- Front cloth and vinyl rear seat combination is available by ordering option 5T5 and requires Jet Black (HOU)
- Center seat can be unbolted for removal
- OPTIONAL Safety Alert Driver's Seat (PCW)

OPTIONAL - SEO 9U3 20% SEAT DELETE

Cloth Front 40/40 Individual Seats (AZ3 & Option 9U3) Deletes center seat to provide 15" of open space between Driver and Passenger Seat. STANDARD 10-way power driver seat, includes power lumbar and power recline. Outboard seat back thoracic-pelvic airbags. STANDARD 6-way power front passenger seat.

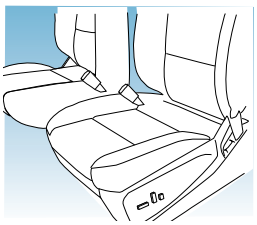
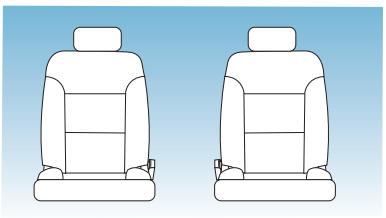

Seat Code	Seat Trim	Color	Color Code
AZ3 & 9U3	Cloth	Jet Black	HOU

- Front cloth and vinyl rear seat combination is available by ordering option 5T5 and requires Jet Black (HOU)
- OPTIONAL Safety Alert Driver's Seat (PCW)

OPTIONAL - A95 BUCKET SEATS

Cloth Bucket Seats with Console (Option A95) river and Passenger Front Bucket Cloth Seats, with integrated retail console. 10-way Power Driver and Passenger Seats with Outboard-Seat Back Pelvic Airbag and driver seat-mounted Front Center Airbag.

Not recommend for vehicles intended to be up-fitted with aftermarket equipment.

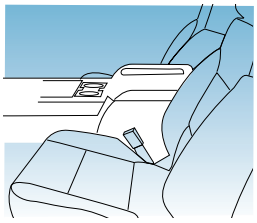
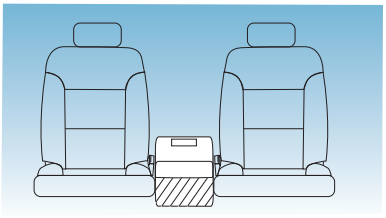

Seat Code	Seat Trim	Color	Color Code
A95	Cloth	Jet Black	HOU

- Front cloth and vinyl rear seat combination is available by ordering option 5T5 and requires Jet Black (HOU)
- Console cannot be deleted
- OPTIONAL Safety Alert Driver's Seat (PCW)

REAR SEATS AND INTERIOR TRIM

STANDARD

Cloth Second Row 60/40 Split-folding Bench Seat (AT6) Includes folding center armrest with cup holder

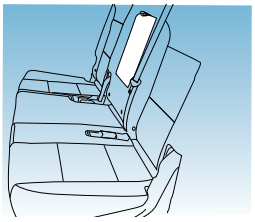
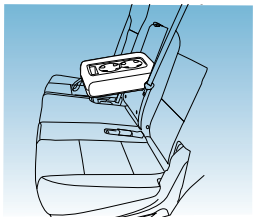
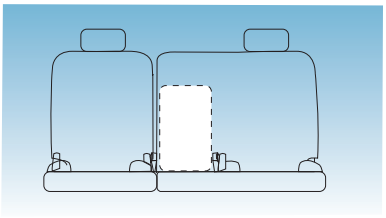

Seat Code	Seat Trim	Color	Color Code
AT6	Cloth	Jet Black	HOU

- Color is based on front seat choice

OPTIONAL - SEO 5T5 VINYL REAR SEAT

Vinyl Second Row 60/40 Split-folding Bench Seat Seat (Option 5T5)

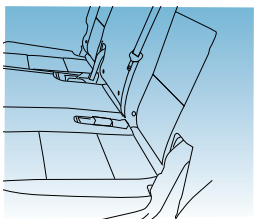
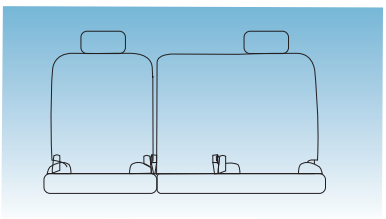

Seat Code	Seat Trim	Color	Color Code
5T5	Vinyl	Jet Black	HOU

- Front cloth and vinyl rear seat combination is available by ordering option 5T5 and requires Jet Black (HOU)

NOTE: Third row seating is not available and roof rail air bags extend into cargo area (see page 35).

UNITED STATES SPEEDOMETER/CLUSTER (CANADIAN SIMILAR)

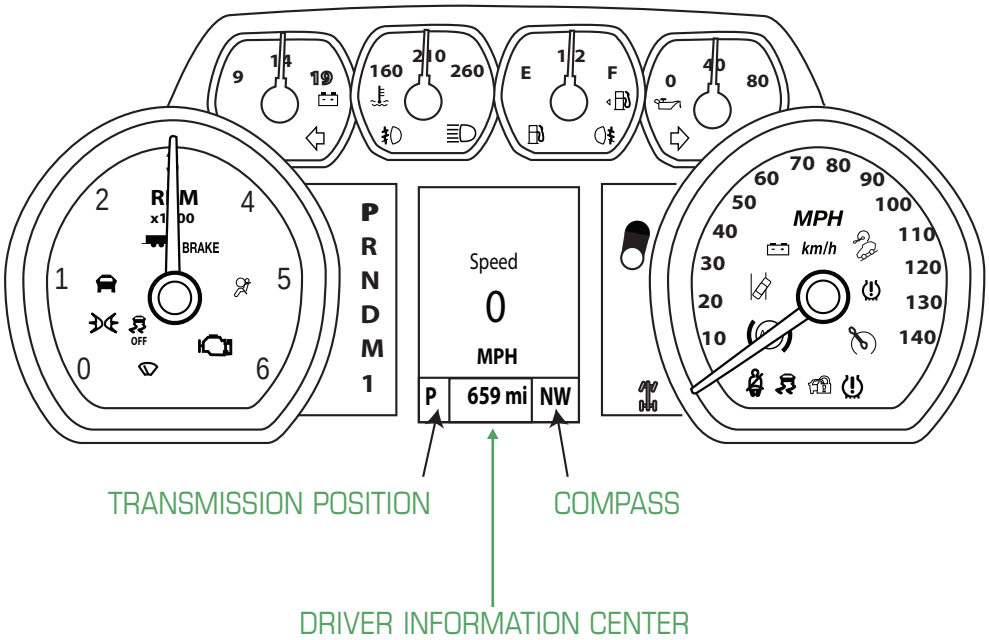

Access DIC Menu Items via Trip Odometer Reset Stem

DIGITAL SPEEDOMETER
TRIP
FUEL RANGE
AVERAGE FUEL ECONOMY
TIRE PRESSURE
REMAINING OIL LIFE
RELEARN REMOTE KEYS
TRANSMISSION FLUID TEMPERATURE
ENGINE HOURS
UNIT

RADIO DISPLAY SCREEN

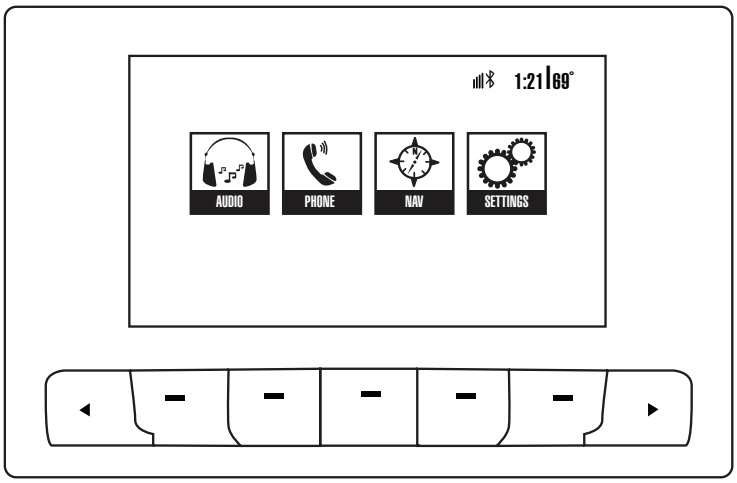

RADIO CONTROLS

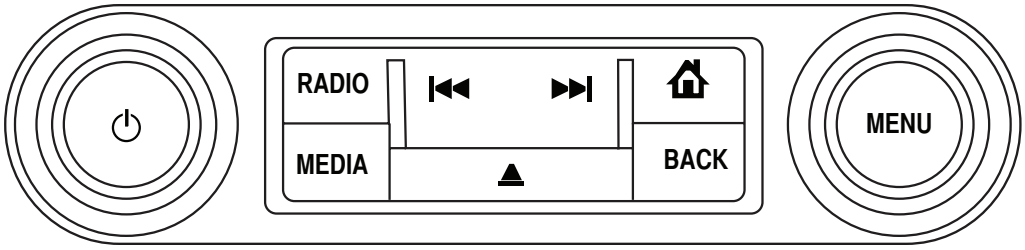

MENU DESCRIPTION

- Audio
- AM
- FM
- CD
- USB/SD
- AUX Input

- OnStar Bluetooth
- Recent Calls
- Contacts
- Keypad
- Manage Phones

- Navigation
  Turn by turn route directions will be displayed (map view not available)

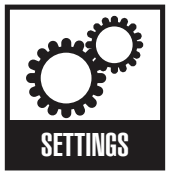

- Time
- Language
- Valet Mode
- Radio
- Vehicle
  - Climate and Air Quality
  - Collision/Detection System
  - Comfort and Convenience
  - Lighting
  - Power Door Locks
  - Remote Lock/Unlock/Start
- Display
- Rear Camera
- Return to Factory Settings

AVAILABLE OPTIONS

RWK **BODY-SIDE MOLDINGS** - Body color, not available in GAN-Silver Ice Metallic and GXG-Tungsten Metallic (Dealer Installed)

1LR **BRAKE SYSTEM, CITY** - Uses base friction material that wears better at lower temperatures and city service. The city brakes are not optimal for track performance. The front rotors are Duralife but do not have the radial drilled holes. The parts are physically interchangeable for service, however the parts should be substituted as complete four wheel sets

UTQ **CONTENT THEFT ALARM DISABLE** - Flashing lamps and horn warning disable (To avoid inadvertent alarm activation this option is recommended for customers that do not intend on using keyless entry remote fobs)

9G8 **DELETE DAYTIME RUNNING LAMPS AND AUTOMATIC HEADLAMPS** - Exterior lamps are operated manually (see Interior/Exterior Lamps Control page 20)

PCW **DRIVER ALERT PACKAGE** - Includes Forward Collision Alert (UEU), Lane Departure Warning and Safety Alert Seat (UFL), and Power-adjustable pedals (JF4). (See page 23)

5T4 **EXTERIOR BODY COLOR PARTS** - Victory Red special painted exterior body parts in lieu of glossy Black color normally installed with special painted bodies. Victory Red painted parts applied to front fascia, rear bumper fascia, rear liftgate license plate appliqué and rear liftgate handle, door handles and body side moldings. Mirrors, rear D-pillar applique and liftgate spoiler will remain Black. Requires SEO TGK special paint and special paint color WA9260 Victory Red. Also requires (V76) Recovery Hooks.

9V7 **EXTERIOR BODY COLOR PARTS** - Dark Blue Metallic, special paint WA-722J applied to front fascia, rear bumper fascia, rear liftgate handle and lifgate appliqué above license plate. Door Handles, Mirrors, rear D-pillar appliqué and lifgate spoiler will remain Black. Includes opening in front fascia without recovery hooks (requires TGK special paint solid) Recovery hooks (V76) optional.

9V2 **EXTERIOR BODY COLORED PARTS** - Blue WA-5665 applied to font and rear fascia. All other non-metal body parts will remain the same as (TGK) special paint solid. Includes opening in front fascia without recovery hooks (requires TGK special paint solid) Recovery hooks (V76) optional.

6J7 **FLASHER SYSTEM HEADLAMPS AND TAIL LAMPS** - DRL compatible, headlamp flasher module with control wire to permit separate front and rear lamp flashing

R9Y **FLEET FREE MAINTENANCE CREDIT** - This option code provides a credit in lieu of the free oil changes, tire rotations and inspections (4 maximum), during the first 24 months and 24,000 miles period for this ordered vehicle. The invoice will detail the applicable credit. The Customer will be responsible for all oil changes, tire rotations and inspections cost for this vehicle. NOTE: Dealer is unable to credit customer on vehicles not originally ordered with (R9Y) option.

B30 **FLOOR COVERING** - Color keyed carpeting (includes rear cargo floor)

B58 **FLOOR MATS** - Color keyed carpeted front and 2nd row included and only available with B30 Floor Covering (not available with vinyl floor covering)

VAV **FLOOR MATS** - All weather (Dealer Installed) Note: Not available with standard black rubberized vinyl floor covering

AKP **GLASS** - NON-TINTED GLASS- Solar absorbing (replaces deep-tinted glass on rear doors and cargo area)

UT7 **GROUND STUDS** - Two located in rear compartment near bottom of liftgate opening

K05 **HEATER** - Engine block

5W4 **IDENTIFIER** - Police Package

6E2 **KEY COMMON** - All vehicles in fleet, provides a single key cut with a specific code that is common to the door lock and ignition of all the vehicles in the vehicle fleet; this key code is an alternate to SEO 6E8 key common, complete vehicle fleet; not compatible with Caprice or Impala. Not compatible with 2014 or older Tahoe.

6E8 **KEY COMMON** - All vehicles in fleet, provides a single key cut with a specific code that is common to the door lock and ignition of all the vehicles in the vehicle fleet; this key code is an alternate to SEO 6E2 key common, complete vehicle fleet; not compatible with Caprice or Impala. Not compatible with 2014 or older Tahoe.

AMF **KEYLESS ENTRY TRANSMITTERS** - Fleet Package includes 6 additional transmitters. Transmitters are not programmed. Each transmitter, including the two standard with the vehicle, must be programmed together by a dealer at customer expense. Transmitter programming is not a warranty item See page 26 for description. See your owner's manual supplement for programming remote key transmitter instructions. Vehicle specific, common fleet transmitter frequency is not available

5HP **KEYS** - 6 additional (see page 26 for description)

6C7 **LAMP, AUXILIARY DOME** - Red and white auxiliary dome lamp is located on the headliner between front row seats (red is LED, white is INCANDESCENT). (wired independently from standard dome lamp)

VK3 **LICENSE PLATE** - Front mounting package (included on orders with ship-to states that require front license plate)

VLI **MAT** - Rear cargo (Dealer Installed)

W2D **NET** - Rear cargo (Dealer Installed)

AVAILABLE OPTIONS CONTINUED

UE0	**ONSTAR DELETE** - BLUETOOTH CELL PHONE CONNECTIVITY AND COMPASS ARE ALSO DELETED WHEN ORDERED (not recommended)
JF4	**PEDALS** - Power-adjustable for accelerator and brake, included with PCW Driver Alert Package
6N6	**REAR DOOR LOCKS AND HANDLES INOPERATIVE** - Rear power locks are inoperable at rear door but operate from drivers position, rear doors can be opened only from outside
6N5	**REAR DOOR WINDOW SWITCHES INOPERATIVE** - Rear windows only operate from drivers position
V76	**RECOVERY HOOKS** - Two front frame-mounted, recommended if front push bumper is to be installed (required on all models sold to Alaska, Guam, Hawaii, Puerto Rico and Virgin Islands)
BTV	**REMOTE VEHICLE STARTER SYSTEM** - Includes remote keyless entry
A95	**SEAT & CENTER CONSOLE** - Driver and Passenger Front Bucket Cloth Seats, with integrated retail console. 10-way Power Driver and Passenger Seats with Outboard-Seat Back Pelvic Airbag and Driver Inboard Seat Back Airbag. **Not recommend for vehicles intended to be up-fitted with aftermarket equipment.**
5T5	**SEAT** - Front cloth with vinyl rear seat (see seating options on page 9)
VRS	**SHADE** - Rear cargo (Dealer Installed)
TGK	**SPECIAL PAINT SOLID** - One color all normally body-colored non-sheet metal parts will be gloss Black. This includes front and rear facias, liftgate handle and applique, D-pillars and upper liftgate applique. Mirrors and door handles will be grained Black parts. B85 body-side moldings are not available except with SEO option 5T4 exterior body-colored parts. Required with any SEO paint selection (may require extended lead time)
VQK	**SPLASH GUARDS** - Front and rear (Dealer Installed)
7X6	**SPOTLAMP** - Left hand, separately fused
7X7	**SPOTLAMPS** - Left and right hand, separately fused
NHT	**TRAILERING PACKAGE, MAX** - Includes (GU6) 3.42 rear axle, (JL1) trailer brake controller, and (Z85) suspension package (Requires PZX aluminum wheels and RKX 18 in. all-season tires)
RC3	**TIRES** - P265/70R17 all-terrain, blackwall
RKX	**TIRES** - P265/65R18 all-season blackwall
4JQ	**TIRE** - Spare P265/70R17 all-terrain, blackwall (Requires RC3 all-terrain tires)
PZX	**WHEELS** - 18 in. x 8.5 in. (45.7 cm x 21.6 cm) aluminum with high-pollished finish
WX7	**WIRING** - For customer connection to front door and windshield pillar speakers. Front speakers are not connected to the vehicle radio; radio audio signals are routed to the rear speakers
6J3	**WIRING** - For grille lamps and siren speaker
6J4	**WIRING** - For horn/siren circuit, in-line connection for customer furnished switch
SFV	**WIRELESS NETWORK INTERFACE MODULE** - (Dealer Installed)
S6N	**TRAILER HITCH INSERT** - Black rubber square with a logo that closes out the receiver see page 24 for illustration (Dealer installed)

Note: Factory installation of spotlamps are recommended. Special tooling is used to locate and drill the spotlamp shaft hole in the pillars. (Interior trim covers provided with factory installed lamps are not available as service parts). Field installation of spotlamps must not interfere with proper deployment of the roof rail airbag in the event of a crash.

DIMENSIONS

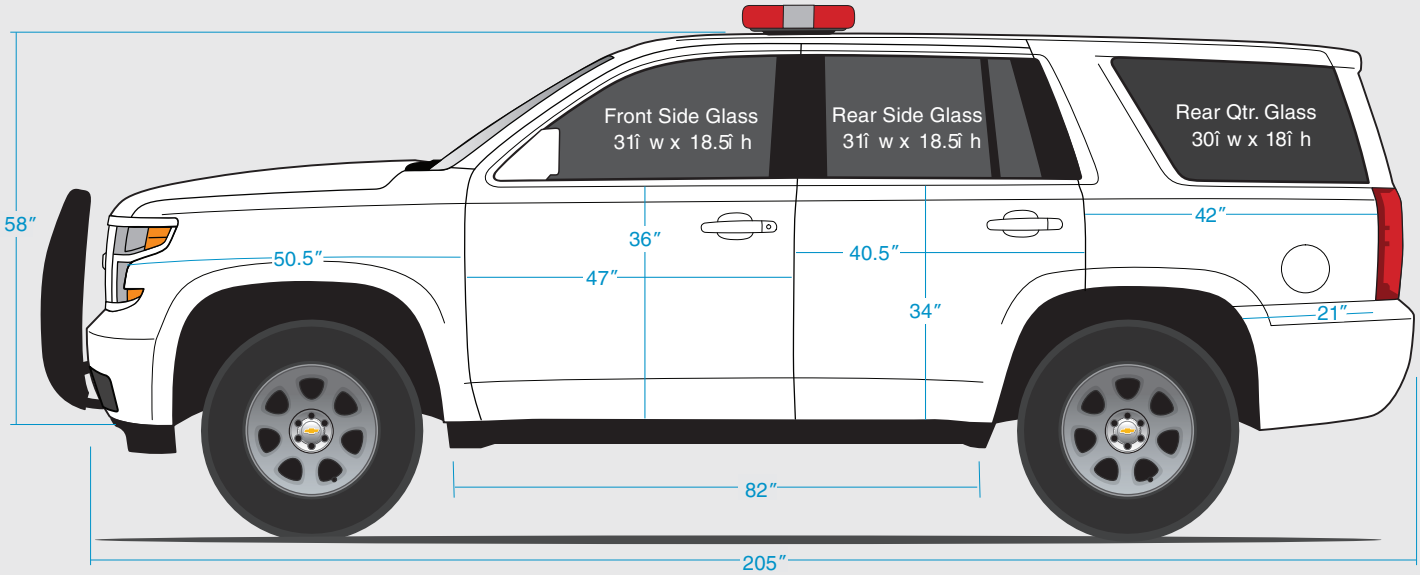

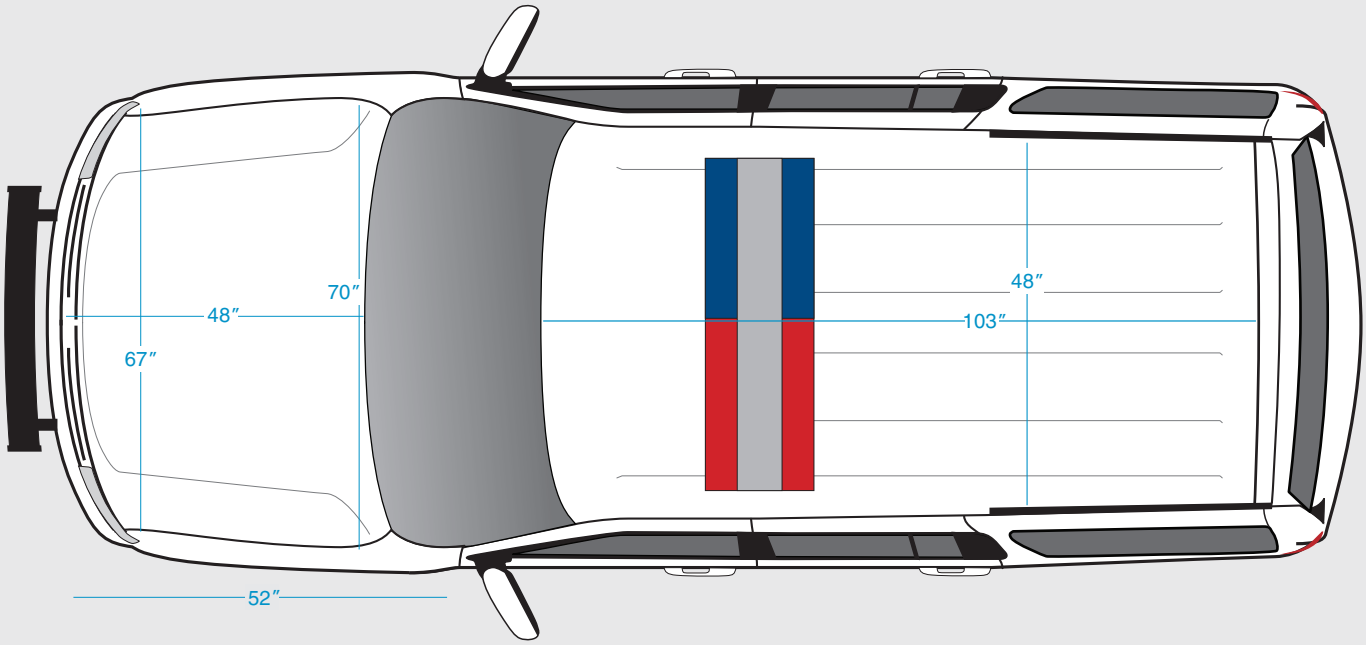

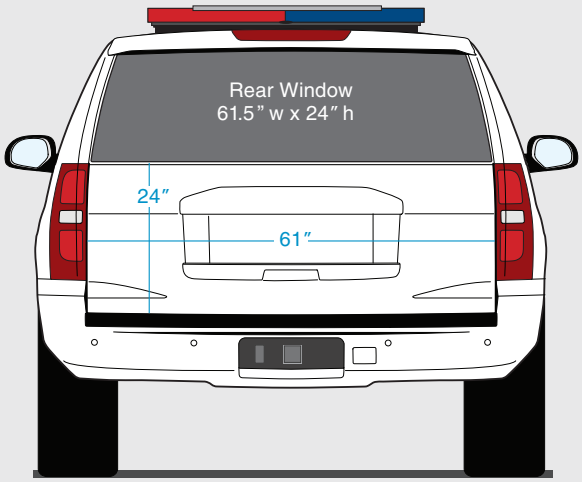

Estimated material sizes to wrap:

- Hood – 72″ x 52″
- Front Doors – 50″ x 38″
- Rear Doors – 42″ x 36″
- Roof – 110″ x 55″
- Rear hatch – 63″ x 26″

SPECIFICATIONS

GENERAL

Model	CK15706
Drive	4-wheel
Projected Top Speed (without equipment)	112 mph

EXTERIOR *(in./mm)*

Wheelbase	116.0/2946
Overall length	204.0/5182
Overall width	80.5/2045
Overall height	74.4/1890
Lift in height (load floor to ground)	35.9/912
Step height (front door sill to ground)	32.4/824
Step height (rear door sill to ground)	31.7/805
Front track width	68.7/1745
Rear track width	68.7/1744
Turning diameter curb to curb (ft./m)	39.0/11.9
Ground clearance (rear axle)	8.0/203

FRONT COMPARTMENT *(in./mm)*

Head room (Maximum)	42.8/1087
Shoulder room	64.8/1646
Hip room	60.8/1544
Leg room (Maximum)	45.3/1151

REAR COMPARTMENT *(in./mm)*

Head room	38.7/983
Shoulder room	65.1/1654
Hip room	60.2/1531
Leg room	39.0/991

CARGO

Load floor length to center of front seat at floor (in./mm)	83.4/2118
Load floor length to center of front seat at top of seat (in./mm)	79.9/2029
Load floor length to center of 2nd seat at floor (in./mm)	49.9/1268
Load floor length to center of 2nd seat at top of seat (in./mm)	43.2/1097
Inside width between wheel house (in./mm)	49.3/1252
Cargo area height (in./mm)	40.9/1039
Cargo volume[1] maximum behind front seat (cu. ft./liters)	111.8/3167
Cargo volume[1] maximum behind second seat (cu. ft./liters)	55.0/1557

NOTE: For additional dimensional data go to: gmupfitter.com

PASSENGER COMPARTMENT VOLUME INDEX *(cu.ft./liters)*

Passenger compartment volume index	120.7/3418

FUEL ECONOMY RATINGS CITY/HIGHWAY/COMBINED

5.3L engine 4WD[2]	16/22/18

Projected EPA label values, actual mileage will vary with options, driving conditions, driving habits and vehicle's condition.

VEHICLE WEIGHT *(lbs./kg.)*

Seat Type	40/20/40	40/40
GVWR[3]	7300/3311	7300/3311
Minimum Curb Weight[4]	5535/2511	5506/2498
Maximum Payload[5]	1765/801	1794/814
Maximum Trailering[6] Standard	6400/2903	6400/2903
Maximum Trailering[6] Optional	8400/3810	8400/3810

NOTE: See owner's manual supplement for loading information

1. Cargo and load capacity limited by weight and distribution.
2. EPA-estimated MPG.
3. Gross Vehicle Weight Rating (GVWR). When properly equipped, includes vehicle, passengers, cargo and equipment.
4. Curb weight in operational status with 100% fuel, fluids and standard base equipment (excludes optional content)
5. Maximum payload capacity includes weight of driver, passengers, optional equipment and cargo.
6. Maximum Trailer Weight ratings are calculated assuming a base vehicle except for options necessary to achieve the rating plus driver. The weight of other option equipment, passengers and cargo Will reduce the maximum trailer weight your vehicle can tow. See Order Guide for additional information.

SPECIFICATIONS

ENGINE

	STD
Type	ECOTEC V8
Displacement: liters/cu. in.	5.3/325
Horsepower/rpm	355 @ 5600
Torque lb.-ft./rpm	383 @ 4100
Induction system	Direct Injection
Compression ratio	11.0:1
Exhaust	Single
Minimum recommended fuel octane	87
Fuel tank capacity (gallons/liters)	26/98
Oil with filter (quarts/liters)	6.0/5.7
Cooling capacity (quarts/liters)	18.3/17.3

TRANSMISSION

Automatic electronic with overdrive	6-speed
Fluid pan removed and filter replaced (quarts/liters)	6.0/5.7

AXLE

Ratio	3.08

BRAKES

ABS with vacuum-boost	Disc/Disc
Front-swept area (sq. in./sq. cm)	256.6/1655
Rear-swept area (sq. in./sq. cm)	248/1600
Total front and rear swept area (sq. in./sq. cm)	504.6/3255
Front rotor diameter (in./mm)	13.0/330
Rear rotor diameter (in./mm)	13.5/343
Front rotor thickness (in./mm)	1.2/30
Rear rotor thickness (in./mm)	.79/20

TIRES

Type	'S' Rated, all season
Size	P255/70R17

WHEELS

Type	Steel
Size	17" x 8"

CHASSIS

Frame	Full perimeter steel
Front suspension	SLA (Short Long Arm) with coil over shock and stabilizer bar
Rear suspension	Multi-link, coil springs and stabilizer bar
Steering type	EElectric power-assisted rack and pinion
Steering ratio	17.75:1

BATTERIES

	PRIMARY	AUXILIARY
Type	Maintenance free	Maintenance free
BCI group size	LN3	LN3
Volts	12	12
Amp hour rating	80	80
Cold cranking-amps @ 0°F (-18°C)	660	730
Reserve capacity @ 80°F (27°C)	135 minutes	110 minutes

ALTERNATOR

Type		REMY DR44M
Amps	77°F (25°C)	170

TAHOE POLICE ALTERNATOR OUTPUT

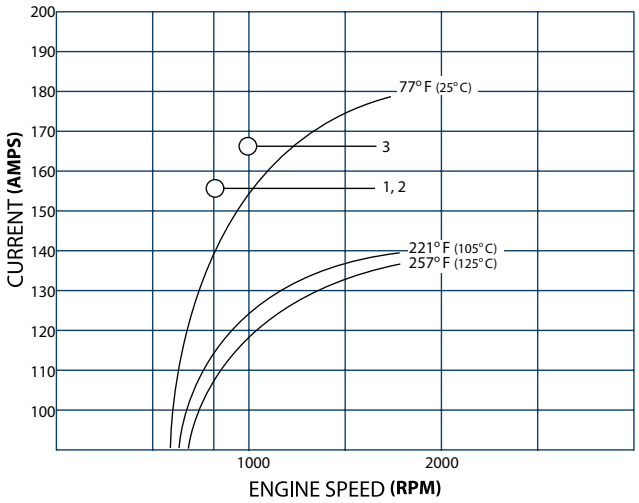

BOOST LEVEL	PARK/NEUTRAL	DRIVE
Normal Idle	550	500
1	800	650
2	800	725
3	1000	800

VEHICLE LOAD LIMITS

This information is intended for those who intend to install additional equipment on the police vehicle after it has left the factory, and for those who will be driving and loading the vehicle with passengers and/or cargo. Two labels on your vehicle show how much weight it was designed to carry, the Tire and Loading Information label and the Certification/Tire label. These labels are attached to your vehicle and give you the maximum load capacity, the Gross Vehicle Weight Rating (GVWR) and the Gross Axle Weight Rating (GAWR) for your vehicle. See "Vehicle Load Limits" in the owner manual Index for additional loading information.

The following guidelines can help you with proper loading and load distribution when installing additional equipment on the TahoePolice Package.

WARNING

DO NOT LOAD THE VEHICLE ANY HEAVIER THAN THE GROSS VEHICLE WEIGHT RATING (GVWR), NOR EITHER THE MAXIMUM FRONT OR REAR GROSS AXLE WEIGHT RATING (GAWR). THIS CAN CAUSE SYSTEMS TO BREAK AND CHANGE THE WAY THE VEHICLE HANDLES. THIS COULD CAUSE LOSS OF CONTROL AND A CRASH. OVERLOADING CAN ALSO SHORTEN THE LIFE OF THE VEHICLE.

ADDING EQUIPMENT TO YOUR VEHICLE

Before adding accessories or equipment to your police vehicle, there are some things you need to know

- The police vehicle's maximum capacity weight (payload). The weight of your police vehicle, including a full tank of fuel but without a driver and passengers.
- The weight of items you plan on adding to your police vehicle, like roof mounted light bar(s), push bumpers, security barrier(s), rear storage organizer, highway flares, fire extinguishers, weapons, ammunition, radios, and video equipment.
- The weight and number of passengers you intend to carry in your vehicle.
- The total weight of any additional cargo you intend to carry in your vehicle.

When planning your vehicle equipment installation remember not to exceed the Gross Vehicle Weight Rating (GVWR) or the Gross Axle Weight Rating (GAWR) of the front or rear axles. To keep the available load weight less than the vehicle capacity weight, you may need to limit the number of passengers you carry in your vehicle or change your choice of additional equipment. Towing a trailer may change the vehicle payload capacity.

CENTER OF GRAVITY (CG)

A vehicle's center of gravity is an imaginary location inside the vehicle and is a balance point for the vehicle mass as it moves down the road. The police vehicle's center of gravity, before you add a load and passengers, is approximately midway between the center of the axles, up from the ground to just below the front window, and between the driver and passenger. Equipment location and weight on the vehicle's center of gravity is important to keep in mind when planning an installation. Heavy equipment should be positioned as low and as far forward in the rear load compartment as possible. Try to mount the equipment below the bottom of the side windows. Refer to the Loading Zone chart and diagram to help with your installation plan.

A procedure to make the necessary measurements and formulas to calculate the vehicle longitudinal, lateral and vertical position of the center of gravity can be found in the GM Coachbuilders Manual.

Equipment required to conduct the measurements for calculating the center of gravity are:

- Weight scales of sufficient capacity to measure the vehicle weight at each wheel.
- A post type hoist or other means to safely elevate the front of the vehicle to at least an angle of 20 degrees above horizontal.

See your GM dealer to get more information about this coachbuilder procedure.

Keeping the center of gravity midway between the axles is also important to provide proper braking performance. About half the total vehicle weight on each axle is recommended.

Weigh your vehicle after the additional equipment has been installed to determine the actual weight of your vehicle. Weigh the vehicle with a full tank of fuel and without passengers. You may need to put a limit on how many people or other equipment you can carry inside your vehicle after the additional equipment has been installed.

Note: See loading zone weight chart and diagram

LOADING ZONES

Loading zones for customer installed equipment and cargo with six occupants
Refer to your vehicle tire placard for Vehicle seating Capacity and Payload Capacity (Occupants + Cargo) Weight

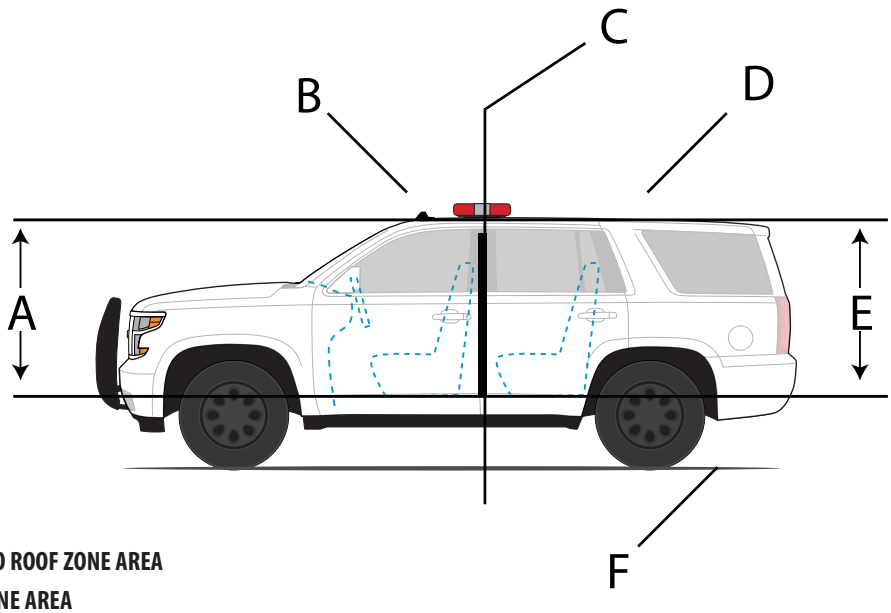

A. FRONT FLOOR TO ROOF ZONE AREA
B. FRONT ROOF ZONE AREA
C. BACK OF FRONT DOOR
D. REAR ROOF ZONE AREA
E. REAR FLOOR TO ROOF ZONE AREA
F. GROUND

LOADING ZONE WEIGHT CHART TAHOE POLICE PACKAGE 4WD SPECIAL SERVICE 5W4

LOADING ZONES	FRONT AXLE WEIGHT	REAR AXLE WEIGHT	TOTAL
ROOF	30 LBS (14 KG)	42 LBS (19 KG)	72 LBS (33 KG)
FLOOR TO ROOF	109 LBS (50 KG)	433 LBS (196 KG)	542 LBS (246 KG)
TOTAL	139 LBS (64 KG)	475 LBS (215 KG)	614 LBS (279 KG)

NOTE:
CARGO WEIGHT CAN BE GREATER WITH FEWER OCCUPANTS. TOWING A TRAILER MAY CHANGE VEHICLE PAYLOAD
REFER TO YOUR OWNER'S MANUAL SUPPLEMENT FOR DETERMINING MAXIMUM CARGO LOADING AND POSITIONING.
USING HEAVIER SUSPENSION COMPONENTS TO GET ADDED DURABILITY MIGHT NOT CHANGE YOUR WEIGHT RATINGS.
ASK YOUR DEALER TO HELP YOU LOAD YOUR VEHICLE THE RIGHT WAY.

STANDARD EQUIPMENT

WIRING PROVISIONS FOR 12-VOLT BATTERY POWER SUPPLY

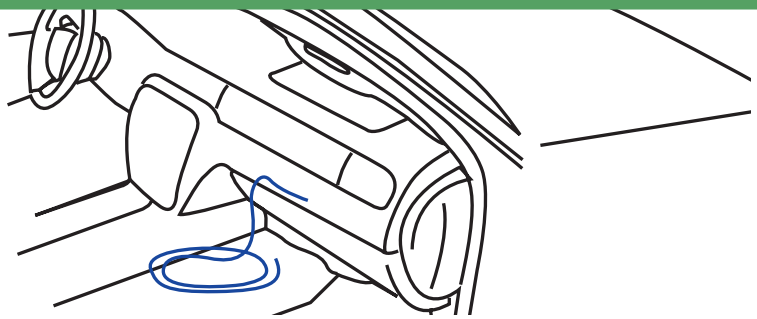

The vehicle is equipped with wiring provisions for connecting 12-volt battery power to customer installed equipment. Refer to the following information when adding electrical accessories that will use the 12-volt power supply circuits connected to the vehicle's electrical system. A wiring harness is located below the instrument panel (IP) near the center of the vehicle and another connection point is located in the left rear of the cargo area.

The 12-volt battery power for customer connection is supplied from the Primary vehicle battery via control relays to four blunt cut 30-amp circuit wires and from an Auxiliary battery via one blunt cut 50 -amp circuit wire in the harness under the center IP. A blunt cut ground wire is also included in the front harness. A 100-amp Rear Electrical Center (REC) stud is located in the left rear cargo area.

The Primary battery is located at the right rear of the engine compartment and the Auxiliary Battery is located at the left front of the engine compartment. The Auxiliary Battery is connected to the vehicle charging system via a relay which is closed when the ignition is ON.

Four 30-amp control relays and 30-amp fuses are located in the Underhood Electrical Center (UEC).

Also in the UEC are two 5-amp fuses which connect control relay coils 1 and 2 and control relay coils 3 and 4 to the UEC Primary battery power bus. The fuses can be re-positioned to connect the relays to the UEC primary battery Ignition Power (Run/Crank) bus. Refer to the UEC label showing the 5-amp fuse locations. The fuse positions are labeled "Vbat" for the primary battery power and "R/C" for the Run/Crank power.

The 5-amp fuses can be positioned to have all four control relay coils powered by the Primary bus or all four powered by the Run/Crank bus. Alternatively, one pair of relay coils (e.g., 1 & 2) can be connected to the Primary bus and the other pair of relay coils (e.g., 3 & 4) connected to the Run/Crank bus.

The four control relays are operated via separate blunt-cut wires located in the harness under the instrument panel and are intended to be connected via customer switching to vehicle ground. The auxiliary power control relay control wires and the relay contact 30-amp load side wires for customer connection are identified as follows:

Blunt cut ignition control and signal wires are also included in the front harness under the center IP:

Control Relay Ground control wires:

- Red/White…Control relay 1
- Yellow/White…Control relay 2
- Green/Grey…Control relay 3
- White/Blue…Control relay 4

12-volt, 30-amp load wires:

- Blue…Control relay 1
- Grey/Black…Control relay 2
- Yellow/Brown…Control relay 3
- Red/Green…Control relay 4

- A Violet/Yellow circuit wire, hot in ACCESSORY/RUN. This circuit is also provided in a coil in the cargo area near the REC.
- A Violet/White circuit wire, Hot in RUN/CRANK. This circuit is also provided in a coil in the cargo area near the REC.
- A Yellow/Black circuit wire, transmission in Park signal. The circuit provides switched 12-volt power when the transmission control is in Park and the engine is running. The circuit is at 0 volts when the transmission control is in any other position, i.e., R, N, D, L. Note that the circuit is at 12-volts when the transmission is in Park and the ignition is in LOCK/OFF. To avoid the possibility of undesired parasitic electrical load when the ignition is OFF, it is recommended that the Park Signal circuit be isolated by a customer furnished ignition control relay.
- A Green/Gray circuit wire for Vehicle Speed signal providing 4000 pulses per mile.
- A White/Blue circuit wire for 12-volts when the Service Brakes are applied.
- Blue/White wire provides a pulsating 12 volt signal when a left turn is selected
- A Yellow/Gray wire provides a pulsating 12 volt signal when a right turn is selected
- All automatic lighting can be disabled when a ground is applied via a customer-furnished wire terminated in BCM connector X2, terminal 18

A 100-amp battery voltage stud for customer connection is located in the REC at the left rear of the cargo area. The ACCESSORY/RUN (Violet/Yellow) and RUN/CRANK (Violet/White) circuits are coiled near the REC.

AUXILIARY BATTERY POWER REAR ELECTRICAL CENTER

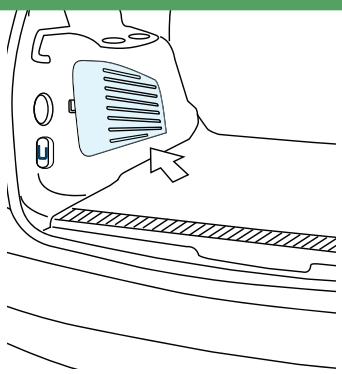

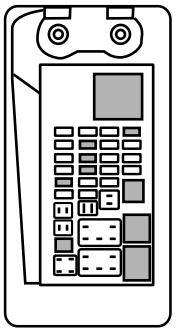

A 100-amp battery voltage stud is located in the Rear Electrical Center (REC) at the left rear of the cargo area. Removal of the vented trim cover in the lower left quarter trim panel provides access to the REC, located to the rear of the jack stowage compartment. A blunt cut ACCESSORY/RUN (Violet/Yellow) circuit wire and a blunt cut RUN/CRANK (Violet/White) circuit wire are coiled near the REC. The nut on the power stud must be torqued to 9Nm+0.5 when attaching other wires to the stud. The stud adjacent to the rear of the 100 amp power stud is inactive.

TIRE PRESSURE MONITOR

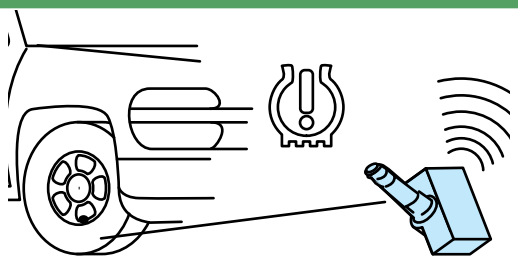

The Tahoe Police Package is equipped with Tire Pressure Monitor System (TPMS) which warns of low tire pressure. The Tahoe Police Package has a full size spare tire with a TPMS sensor which does not read spare tire pressure. When the spare tire from your vehicle or an unused spare tire from another Police Package is placed in use as a road wheel, the system will not read the presence of the new TPM sensor and must be calibrated. Refer to your owner's manual for additional information the Tire Pressure Monitor System Programming. The Special Service Package 5W4 does not have a TPM sensor in the spare tire.

STANDARD EQUIPMENT

RADIO SUPPRESSION GROUND STRAPS

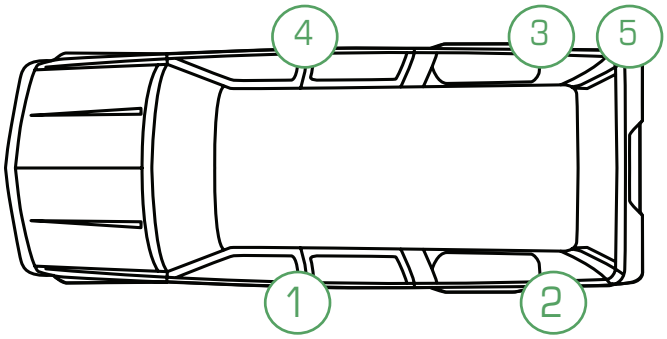

Police Package is equipped with additional grounding in the following locations:

1. Left hand front frame body mount bracket to underbody
2. Left hand rear frame body mount bracket to rear underbody
3. Right hand rear frame body mount bracket to rear underbody
4. Right hand front frame body mount bracket to underbody
5. Exhaust pipe hanger rod to rear frame hanger

SERVICE PARTS IDENTIFICATION LABEL

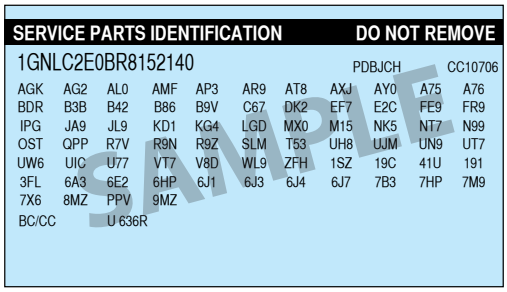

SERVICE PARTS IDENTIFICATION DO NOT REMOVE

1GNLC2E0BR8152140 PDBJCH CC10706

AGK	AG2	AL0	AMF	AP3	AR9	AT8	AXJ	AY0	A75	A76
BDR	B3B	B42	B86	B9V	C67	DK2	EF7	E2C	FE9	FR9
IPG	JA9	JL9	KD1	KG4	LGD	MX0	M15	NK5	NT7	N99
OST	QPP	R7V	R9N	R9Z	SLM	T53	UH8	UJM	UN9	UT7
UW6	UIC	U77	VT7	V8D	WL9	ZFH	1SZ	19C	41U	191
3FL	6A3	6E2	6HP	6J1	6J3	6J4	6J7	7B3	7HP	7M9
7X6	8MZ	PPV	9MZ							
BC/CC		U 636R								

SAMPLE

A Service Parts Identification (SPID) Label provides Vehicle Identification Number (VIN)-specific Option Code content list, Engineering Model Number (Nameplate, body style), Exterior paint system, Exterior paint color code and Interior trim level and color. The SPID label for the Tahoe is located on the inner surface of the instrument panel storage compartment (glove box).

STABILITRAK CONTROL

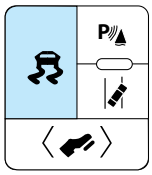

The Stabilitrak Stability Control System control button is located to the left of steering column on the instrument panel. See your Owner's Manual for an operation description of the stability control system. (shown with optional power adjustable pedals)

SURVEILLANCE FEATURE MANUAL LAMP CONTROL AND 9G8

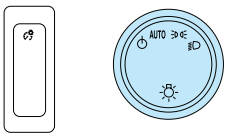

The headlamp control on the driver's side of the instrument panel operates the exterior lamps. If your Tahoe does not have option 9G8, DELETE DAYTIME RUNNING LAMPS and AUTOMATIC HEADLAMPS, the Daytime Running Lamps and Automatic Headlamps can be turned OFF for one ignition cycle by rotating the headlamp control knob momentarily counter-clockwise. See also Section 3 of your Tahoe Owner's Manual.

Surveillance Feature – The Body Control Module (BCM) has been calibrated to provide disabling of the exterior and interior automatic lighting. The BCM is located under the instrument panel to the left side of the steering column.

The Surveillance Feature can be connected by installing a terminated wire in cavity 18 of the Light Blue colored BCM connector, X2. The wire and terminal part number to be installed is GM #13582297. When a customer-provided terminated wire is properly installed in X2-18 and the wire is connected via a customer-provided switch to vehicle ground, all automatic lighting is disabled. The feature functions with and without SEO 9G8. See the wiring diagram on page 29.

Option SEO 9G8 – Delete Daytime Running Lamps and Automatic Headlamps. This option disables the Daytime Running Lamps and Automatic Headlamps control feature. Exterior lamps are only manually controlled (Option 9G8 is not available in Canada).

When the headlamp switch is in Auto with 9G8 installed, the instrument cluster, radio display and air conditioning illumination remains at daytime intensity and are dimmable only when the headlamp switch is rotated to the Parking Lamps or Headlamps positions. If SEO 9G8 is not installed, the displays are dimmable with the Headlamp switch in the AUTO position.

Interior courtesy lamps, including dome lamps, can be turned OFF with a three-position switch located in the front overhead console. The interior lamp control positions are: OFF – DOOR – ON

When the switch is in the OFF position, all interior lighting remains off whenever the doors or liftgate are opened.

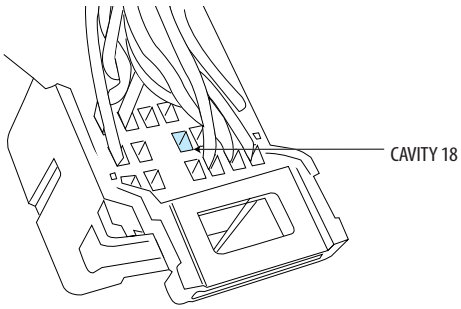

USB/SD CONNECTOR LOCATION

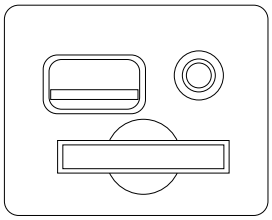

Connectors are located under the front center armrest. Note that vehicles ordered with option (9U3) center seat delete will arrive with loose harness and receiver for customer furnished mounting.

STANDARD EQUIPMENT

COVERING - FLOOR

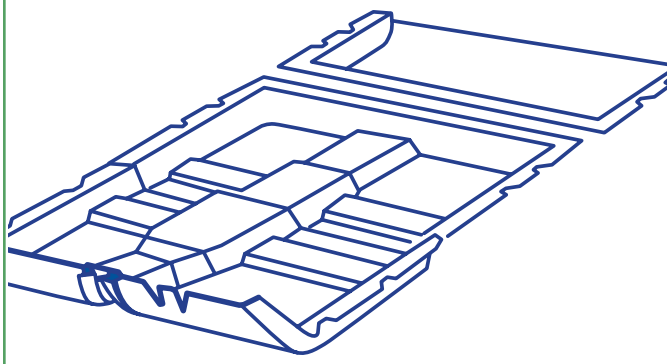

Heavy-duty black vinyl

TRANSMISSION OIL COOLER

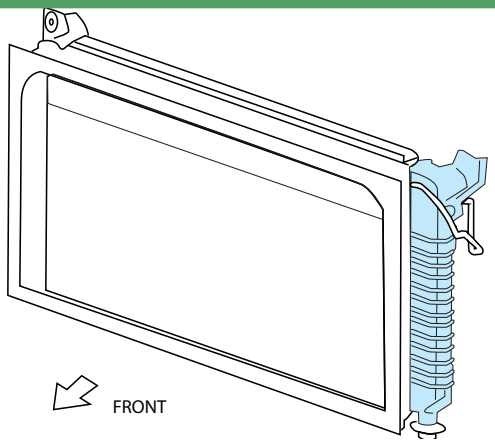

Transmission oil is pumped from the transmission through piping to an oil-to-coolant heat exchanger within the left side end-tank of the engine coolant radiator. From the engine radiator heat exchanger, the transmission oil flows through an oil-to-air heat exchanger in the upper portion of the air conditioning condenser tubing and returns to the transmission. The air conditioning condenser is located in front of the engine coolant radiator as part of the Cooling Fan and Radiator Module (CFRM) assembly.

ENGINE OIL COOLER

VIEW FROM ENGINE

Engine Oil and Transmission Oil are cooled by passing the fluids through separate coolers located in the engine radiator assembly end tanks and the air conditioning condenser

Engine oil is pumped by the engine oil pump from the right side of the engine block through piping to an oil-to-coolant heat exchanger located within the right side end-tank of the coolant radiator and returned to the engine.

ELECTRIC POWER STEERING SYSTEM

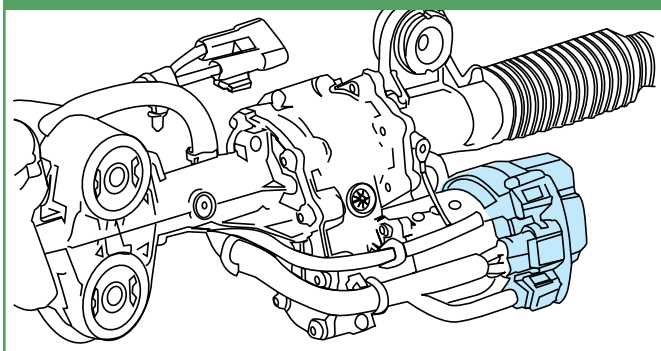

The Electric Power Steering System consists of a Rack-and-Pinion steering gear assisted by an electronically controlled power steering motor and drive assembly. The steering gear is mechanically connected to the steering wheel system.

UNDERBODY SHIELD, FRONT

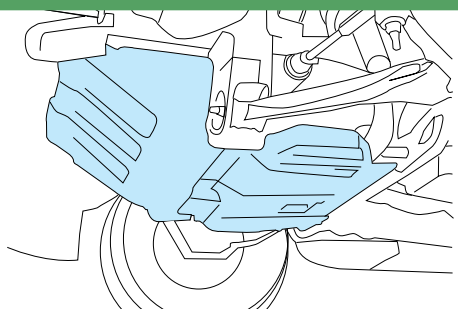

Two piece aluminum front underbody shield staring behind the front bumper and running to the 2nd cross-member protecting front underbody and oil pan.

STANDARD EQUIPMENT

ONSTAR

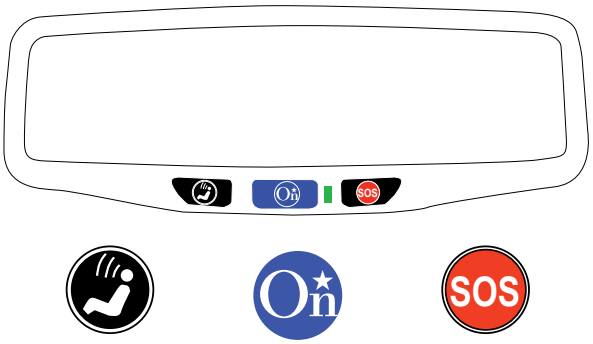

Voice Command Button

Blue OnStar Button

Emergency Button

This vehicle is equipped with a comprehensive, in-vehicle system that can connect to a live OnStar Advisor for Emergency, Security, Navigation, Connection, and Diagnostic Services. OnStar services may require a paid subscription. OnStar requires the vehicle battery and electrical system, cellular service, and GPS satellite signals to be available and operating. OnStar acts as a link to existing public emergency service providers. OnStar may collect information about you and your vehicle, including location information. See OnStar's Terms and Conditions and Privacy Statement for more details including system limitations at www.onstar.com (U.S.) or www.onstar.ca (Canada). The OnStar system status light is next to the OnStar buttons. If the status light is:

- Solid Green: System is on.
- Flashing Green: On a call.
- Red: Indicates a problem.
- Off: System is off. Press the blue OnStar button twice to speak with an OnStar Advisor.

Press or call 1-888-4-ONSTAR

(1-888-466-7827) to speak to an Advisor.

Press to:

- Make a call, end a call, or answer an incoming call.
- Give OnStar Hands-Free Calling voice commands.

NOTE: Do not activate OnStar if you have no plans on using this feature

REAR PARK ASSIST-AUDIBLE WARNING WITH REAR VISION CAMERA

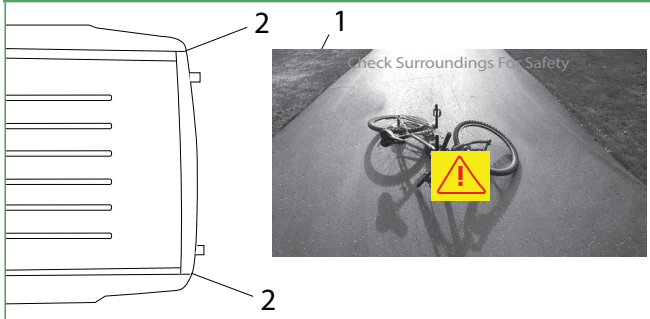

1. View Displayed by the Camera in Radio Screen
2. Corners of the Rear Bumper

Displayed images may be farther or closer than they appear. The area displayed is limited and objects that are close to either corner of the bumper or under the bumper do not display.

A warning triangle may display on the RVC screen to show where the RPA has detected an object. This triangle changes from amber to red and increases in size the closer the object.

Rear Parking Assist (RPA) uses sensors on the rear bumper to assist with parking and avoiding objects while in R (Reverse). It operates at speeds less than 5 mph (8 km/h). RPA may display a warning triangle on the Rear Vision Camera screen and a graphic on the instrument cluster to provide the object distance. In addition, multiple beeps or seat pulses may occur if very close to an object

The RVC displays a view of the area behind the vehicle, on the center stack display, when the vehicle is shifted into R (Reverse).

PROXIMITY SENSORS

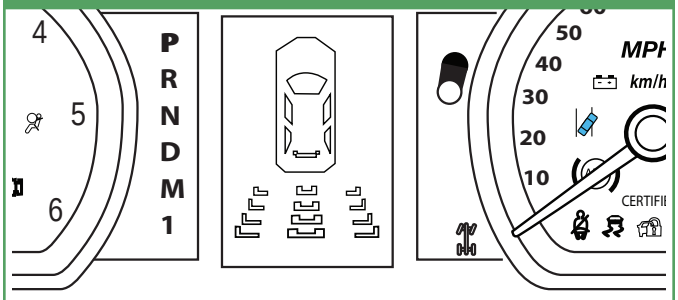

The parking assist display shows bars that show distance to object and object location. When an object is first detected in the rear, one beep will be heard from the rear, or both sides of the Safety Alert Seat will pulse two times. When an object is very close a continuous beep will sound and from the front and rear, or both sides of the Safety Alert Seat will pulse five times

OPTIONAL EQUIPMENT

PCW - DRIVER ALERT PACKAGE (INCLUDES THE FOLLOWING)

SAFETY FEATURES ARE NO SUBSTITUTE FOR THE DRIVER'S RESPONSIBILITY TO OPERATE THE VEHICLE IN A SAFE MANNER. THE DRIVER SHOULD REMAIN ATTENTIVE TO TRAFFIC, SURROUNDINGS AND ROAD CONDITIONS AT ALL TIMES. READ THE VEHICLE'S OWNER'S MANUAL FOR MORE IMPORTANT SAFETY INFORMATION.

UEU - FORWARD COLLISION ALERT (FCA)

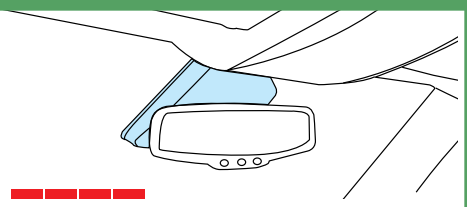

FCA may help avoid or reduce the harm caused by front-end crashes. FAC provides a green indicato, when a vehicle is detected ahead. This indicator displays amber if you follow another vehicle much too closely. When approaching a vehicle ahead too quickly, FAC provides a red flashing alert on the windshield, rapid audible beeps, and/or pulses the driver seat.

FORWARD COLLISION ALERT BUTTON

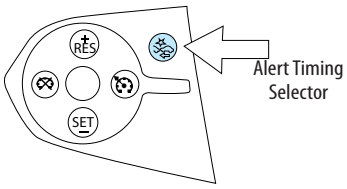

The Collision Alert control is on the steering wheel. Press the Forward Collision Alert Button to set the FCA timing to Far, Medium, Near, or on some vehicles, Off. The first button press shows the current setting on the DIC. Additional button presses will change this setting. The chosen setting will remain until it is changed and will affect the timing of both the Collision Alert and the Tailgating Alert features. The timing of both alerts will vary based on vehicle speed. The faster the vehicle speed, the farther away the alert will occur. Consider traffic and weather conditions when selecting the alert timing. The range of selectable alert timing may not be appropriate for all drivers and driving conditions.

Note: The Safety Alert button is still present even without Forward Collision option.

PARK ASSIST BUTTON

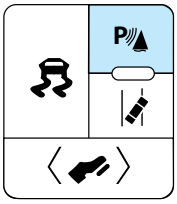

The Park Assist button to the left of the steering wheel is used to turn the Rear Parking Assist ON or OFF. The indicator light on the button comes on when the feature is ON and is OFF when the feature is disabled.

LANE DEPARTURE WARNING BUTTON

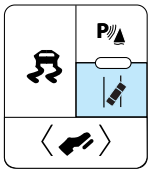

Optional Safety Alert Seat. Drivers get feedback transmitted as a vibration through the surface of the drivers seat bottom cushion. When the Lane Departure Warning system's camera detects the vehicle is leaving a lane without a turn signal active in that direction, a vibration in the left or right seat bolster directs the driver's attention to the side of the lane encroachment. When a potential collision is detected ahead by the Forward Collision Alert system, both sides of the seat vibrate.

JF4 - POWER ADJUSTABLE PEDALS

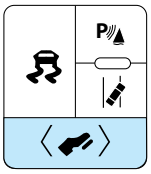

The position of the throttle and brake pedals can be changed. No adjustment to the pedals can be made when the vehicle is in R (Reverse) or while using cruise control. The switch used to adjust the pedals is to the left of the steering wheel. Press the switch to the left to move the pedals closer to your body. Press the switch to the right to move the pedals away.

UFL - LANE DEPARTURE WARNING (LDW)

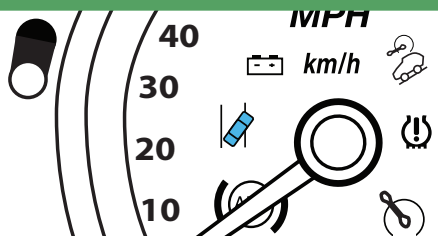

LDW may help avoid crashes due to unintentional lane departures. It may provide a warning if the vehicle is crossing a detected lane marking without using a turn signal in the lane departure direction. LDW uses a camera sensor to detect the lane markings. It only operates at speeds of 35 mph (56 km/h) or greater. When the vehicle crosses a detected lane marking, the LDW indicator will flash and either three beeps will be sounded from the left or right side, or three Safety Alert Seat pulses will occur on the left or right side of the seat, depending on the lane departure direction. LDW will not warn if the turn signal is on in the departure direction, or if a sharp maneuver is made.

SAFETY ALERT SEAT

The Safety Alert Seat is part of the Lane Departure Warning (LDW) system and will provide three vibration pulses to the left seat side or right seat side, depending upon the side of the driving lane that the vehicle is moving toward. Also activated in reverse when objects are detected.

OPTIONAL EQUIPMENT

6N5 SWITCHES – REAR WINDOW INOPERATIVE

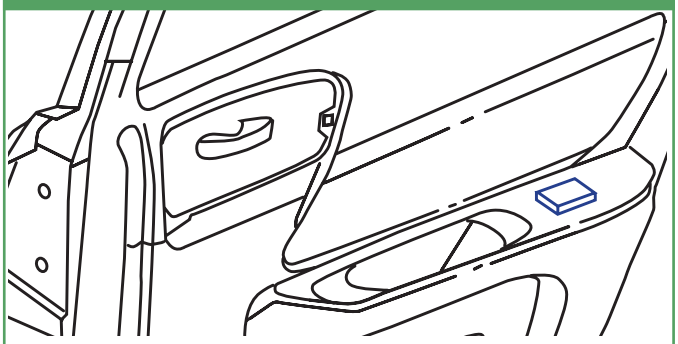

Rear door window switches are inoperable. Rear door power regulators are operable only from driver position switches.

6N6 – REAR DOOR LOCKS AND HANDLES INOPERATIVE

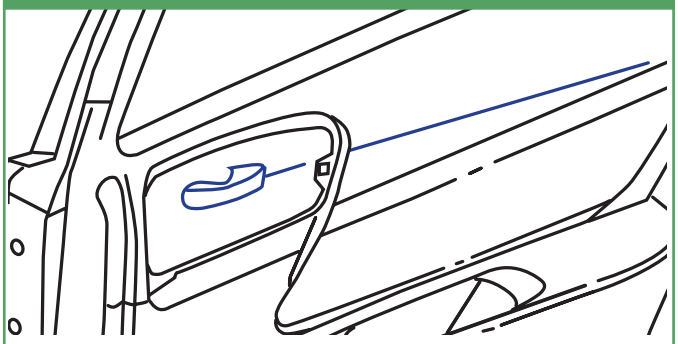

Rear door locking rods are disabled. Rear door locks are inoperable at rear doors, but operate from driver position. Inside rear door handles are disconnected. Rear doors can only be opened from the outside.

S6N TRAILER HITCH INSERT

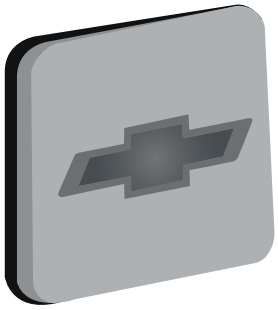

Black rubber square with a logo that closes out the receiver (Dealer installed)

6J7 – EXTERIOR LAMPS EMERGENCY FLASHING SYSTEM

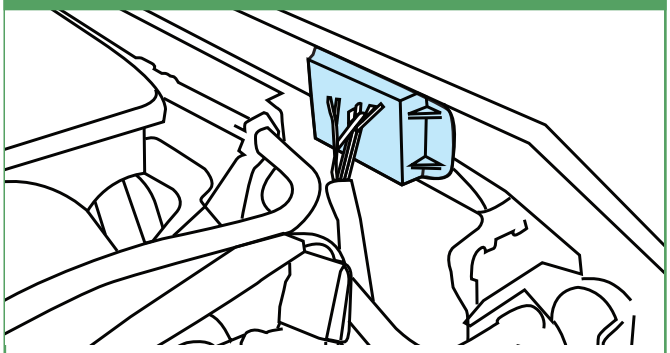

Option 6J7 provides a headlamps high beam flashing module, rear lamps flashing via the Body Control Module (BCM) and a control wire for customer-furnished switching to turn the module on and off. The flasher control wire is part of the blunt-cut upfitter harness coiled under the instrument panel in the front passenger side foot well. The flashing module is located on the rear edge of the right hand upper radiator support.

The headlamp flashing module is activated by the application of 12 volts to a dark green wire in the upfitter harness. When activated, the headlamp high beams and the high beam instrument cluster indicator will flash alternately at 2.4 flashes per second. When the flashing module is turned on, the module sends a signal to the BCM which alternately flashes the stop lamps and backup lamps at the same flash rate as the headlamps. Depressing the brake pedal will override the stop lamp flashing and placing the transmission in Reverse will override the backup lamps flashing.

During daylight conditions, the Daytime Running Lamps (DRL) are automatically turned off whenever the headlamps flashing module is activated. During night time conditions, the low beam headlamps automatically turn on while the high beam lamps flash. Turning on the high beam headlamps manually will override the flashing module and the high beam headlamps will operate continuously. During night time conditions the tail lamps will turn on automatically. If Option 9G8 is present the low beam headlamps and tail lamps will not come on automatically. The Center Mounted Stop Lamp will operate only when the service brakes are applied.

A 10-amp fuse labeled POLICE UPFITTER protects the flasher module circuit. The fuse is located in the Underhood Electrical Center in the engine compartment on the driver side of the vehicle. See also the Owner Manual for more information.

Activation of the headlamps flashing and rear lamps flashing can be separated by opening the blue/green BCM circuit at the flasher module connector, C196-F, and applying a customer-switched ground to the blue/green wire in the upfitter harness coiled under the instrument panel. Power to the green wire must be off to flash rear only.

Warning:
BCM will be damaged if 12V power is connected to the dark-blue/yellow wire.

NOTE: For wiring diagram Wiring Section

OPTIONAL EQUIPMENT

6J3 – WIRING PROVISIONS FOR VEHICLE GRILLE LAMPS AND SPEAKER/SIREN

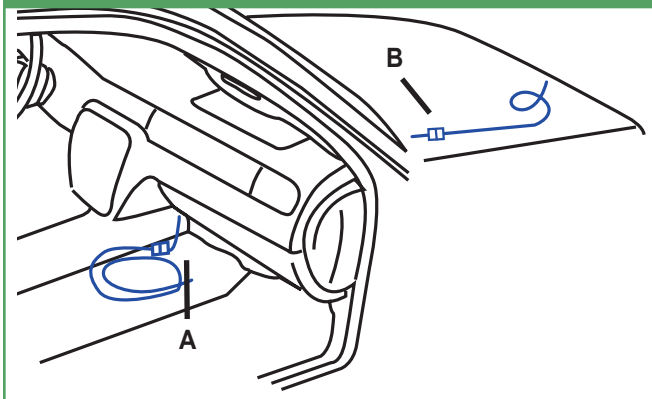

A. Blunt cut ends for the customer-furnished grille lamps and customer-furnished siren/speaker

B. Control wires from in-line connector in forward lamp harness for customer-furnished grille lamps and speaker

The SEO 6J3 wiring provision has a 5-foot (1.5 m) harness coiled underneath the instrument panel on the passenger side. The wiring circuits are routed from under the instrument panel to a 1-foot (30 cm) coil secured in the area behind the grille. There are four 16-gauge (1.0 mm2) wires for connecting to the grille lamps (GRY, TAN) and siren speaker (LT BU, LT GN)

The SEO 6J3 wiring provision also includes one 18-gauge (0.8 mm2) control wire for the SEO 6J7 Exterior Lamps Emergency Flashing System.

When Option 6J7 is installed without Option 6J3, only the green control wire and the blue/green Separation of Function wires are provided for customer furnished switching to operate the Emergency Flashing System.

Note: For wiring diagram see Wiring Section

WX7 – WIRING PROVISION FOR FRONT SPEAKERS

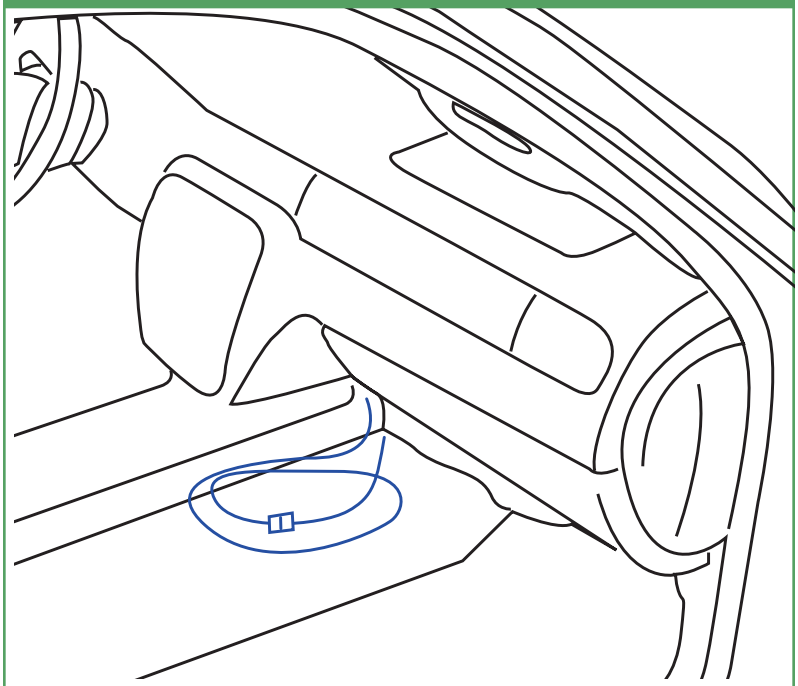

Approximately 60 inches (1.5 m) of auxiliary speaker wiring is routed from the front door and windshield pillar speakers and coiled under the instrument panel. The wiring permits connection of the front speaker pairs to customer-installed communication equipment. Vehicle radio front speaker outputs are re-routed to the rear speakers to maintain the required open door/key-in-ignition audible warning.

NOTE: For wiring diagram see Wiring Section

UT7 GROUND STUDS

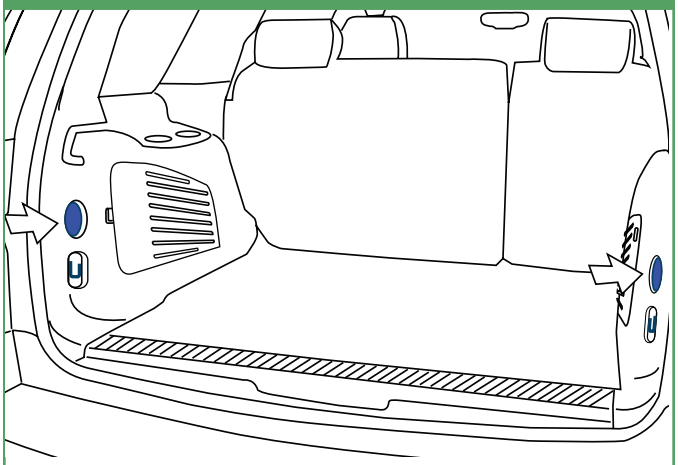

Studs are located on the left and right of the liftgate opening above the tie-down rings

6J4 – WIRING PROVISION FOR HORN SIREN CIRCUIT

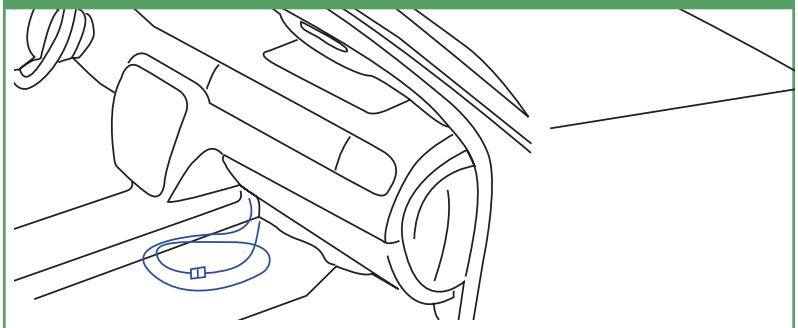

This provision permits customer connection of a switch to select either horn of siren operation when the horn pad is pressed.

A 22-gauge (0.35 mm2) wire is connected to an in-line connector in the horn circuit of the instrument panel harness under the instrument panel. The end of this harness extension is a 5-foot (1.5 m) loop of wire coiled under the center of the instrument panel. ***NOTE: For wiring diagram see Wiring Section***

OPTIONAL EQUIPMENT

7X6 AND 7X7 – SPOTLAMPS

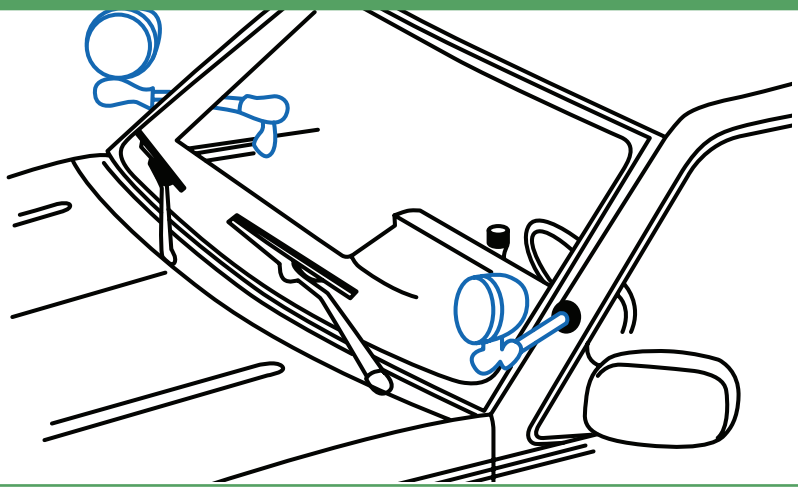

7X6 Spotlamp left hand, pillar-mounted unity, 6-inch with replaceable H3 halogen bulb; independently fused

7X7 Spotlamps left and right hand, pillar-mounted unity, 6-inch with replaceable H3 halogen bulb; independently fused

NOTE: ***• Lamp bulbs are halogen 12 volt 100 watt H-3 rated at 245,000 candle power***

• For fuse location see Wiring Section

• Customer furnished spotlamp assembly must be installed to avoid interference with deploying passenger airbag

• Factory installation of spotlamps is recommended. Special tooling is used to locate and drill the spotlamp shaft hole in the windshield pillars. Field installation of spotlamps must not interfere with proper deployment of the roof rail airbag in the event of a crash.

AMF - PACKAGE OF 6 TRANSMITTERS

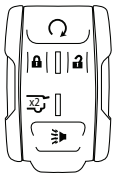

WITH REMOTE START AND REMOTE RELEASE LIFTGLASS

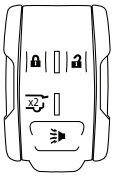

WITHOUT REMOTE START WITH REMOTE RELEASE LIFTGLASS

REMOTE KEYLESS ENTRY - TRANSMITTER PROGRAMMING - SEO AMF - FLEET PACKAGE OF SIX UNPROGRAMMED REMOTE UNITS

Do not operate or program the transmitters in the vicinity of other vehicles that are in the keyless entry program mode. This prevents the programming of the transmitters to the incorrect vehicle.

When programming SEO AMF transmitters, the original two transmitters delivered with the vehicle must also be programmed at the same time or they will not function with the vehicle.

Up to eight transmitters may be programmed to the RKE on Police and Special Service Package equipped vehicles.

Verify that the proper transmitters are learned to the vehicle. Do not learn a transmitter with a remote start button to a vehicle that does not have remote start. To access this DIC display, the vehicle must be in P (Park). To match an RKE transmitter to the vehicle:

1. Press the trip odometer reset stem until RELEARN REMOTE KEY displays.
2. Press and hold the trip reset stem for three seconds. The message REMOTE KEY LEARNING ACTIVE will display.
3. At the same time, press and hold the lock icon and unlock icon on the first transmitter for approximately 15 seconds. A beep will sound indicating the transmitter is matched to the vehicle.
4. Repeat Step 3 to match up to five more transmitters. A total of eight transmitters can be matched per vehicle.
5. To exit the programming mode, turn the ignition key to LOCK/OFF.

5HP-KEY

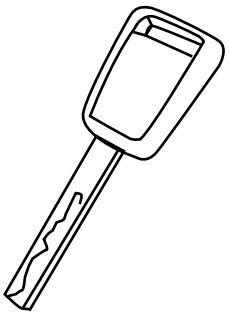

PROGRAMMING KEYS

Follow these procedures to program up to eight keys to the vehicle.

PROGRAMMING WITH A RECOGNIZED KEY

To program a new key:

1. Insert the original, already programmed key in the ignition and turn the key to the ON/RUN position.
2. Turn the key to LOCK/OFF, and remove the key.
3. Insert the new key to be programmed and turn it to the ON/RUN position within five seconds.

The security light will turn off once the key has been programmed.

4. Repeat Steps 1–3 if additional keys are to be programmed.

PROGRAMMING WITHOUT A RECOGNIZED KEY

Program a new key to the vehicle when a recognized key is not available. Canadian regulations require that Canadian owners see their dealer. If there are no currently recognized keys available, follow this procedure to program the first key. This procedure will take approximately 30 minutes to complete for the first key. The vehicle must be off and all of the keys must be with you.

1. Insert the new vehicle key into the ignition.
2. Turn to ON/RUN. The security light will come on.
3. Wait 10 minutes until the security light turns off.
4. Turn the ignition to LOCK/OFF.
5. Repeat Steps 2–4 two more times. After the third time, turn to ON/RUN; the key is learned and all previously known keys will no longer work with the vehicle.

Remaining keys can be learned by following the procedure in "Programming with a Recognized Key."

The key has a bar-coded key tag that the dealer or qualified locksmith can use to make new keys. Store this information in a safe place, not in the vehicle. See your dealer if a replacement key or additional key is needed. If it becomes difficult to turn a key, inspect the key blade for debris. Periodically clean with a brush or pick. With an active OnStar subscription, an OnStar Advisor may remotely unlock the vehicle. See OnStar.com

WIRING

WIRING DIAGRAM FOR 12-VOLT BATTERY POWER SUPPLY

WIRING PROVISIONS FOR 12 VOLT POWER

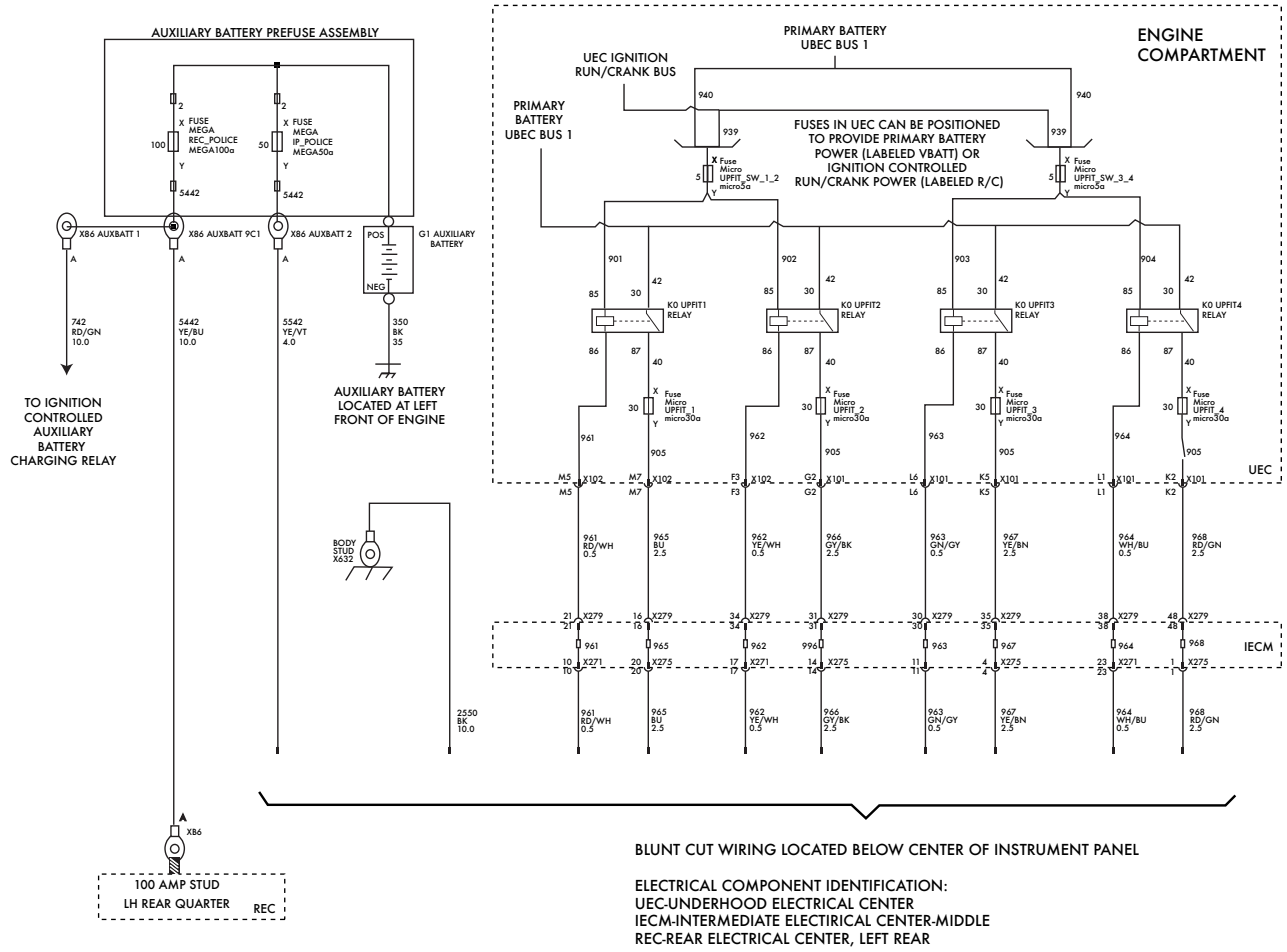

BLUNT CUT WIRING LOCATED BELOW CENTER OF INSTRUMENT PANEL

ELECTRICAL COMPONENT IDENTIFICATION:
UEC-UNDERHOOD ELECTRICAL CENTER
IECM-INTERMEDIATE ELECTIRICAL CENTER-MIDDLE
REC-REAR ELECTRICAL CENTER, LEFT REAR

NOTE: Wiring diagrams for these options are shown in the Police Package owner's manual supplement (shipped in glove box).

WIRING

WIRING PROVISIONS IGNITION POWER AND SIGNAL CIRCUITS

WIRING PROVISIONS IGNITION POWER AND SIGNAL CIRCUITS

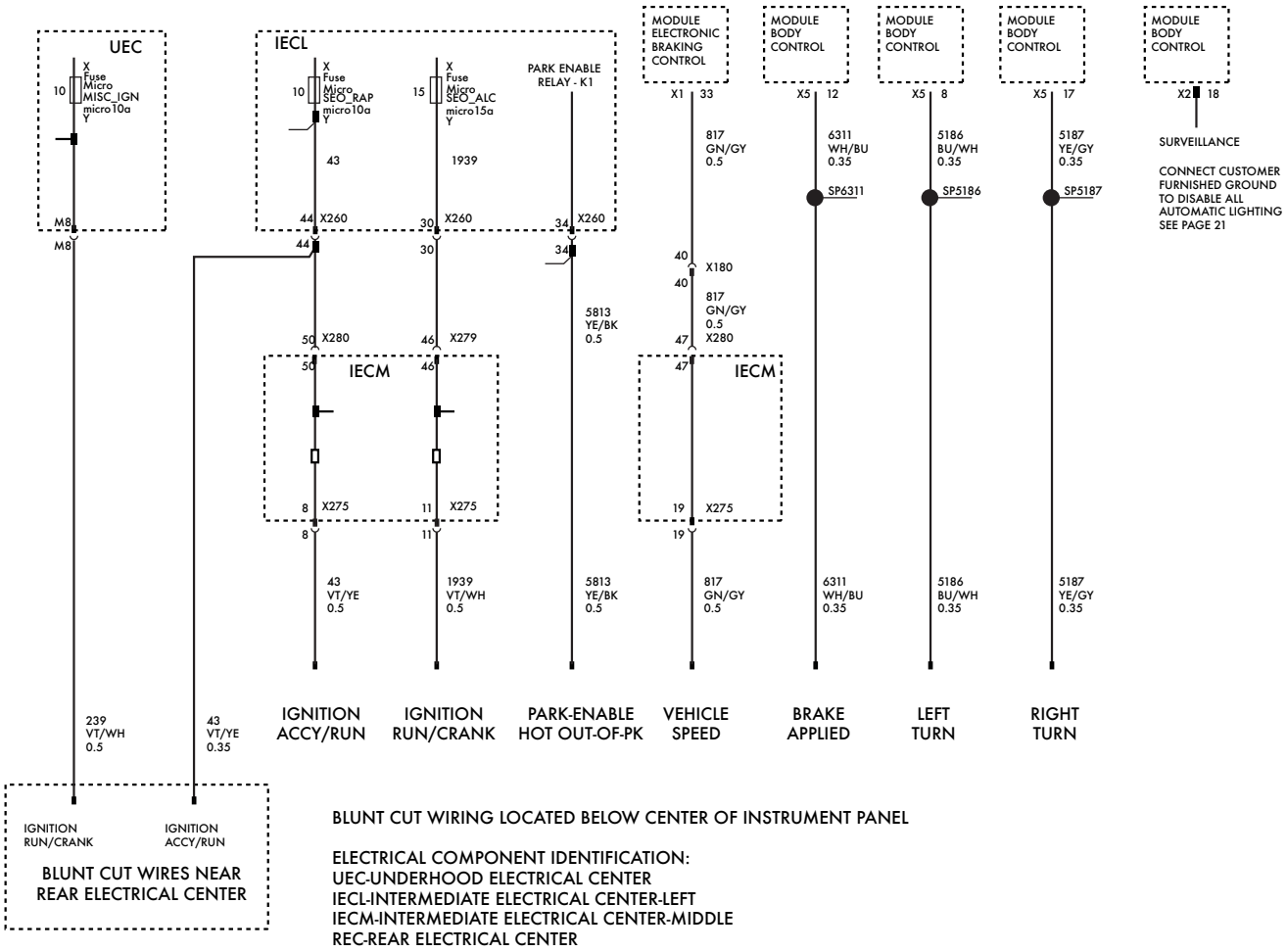

BLUNT CUT WIRING LOCATED BELOW CENTER OF INSTRUMENT PANEL

ELECTRICAL COMPONENT IDENTIFICATION:
UEC-UNDERHOOD ELECTRICAL CENTER
IECL-INTERMEDIATE ELECTRICAL CENTER-LEFT
IECM-INTERMEDIATE ELECTRICAL CENTER-MIDDLE
REC-REAR ELECTRICAL CENTER

NOTE: Wiring diagrams for these options are shown in the Police Package owner's manual supplement (shipped in glove box).

WIRING

WIRING DIAGRAM FOR OPTION 6J3

WIRING PROVISION FOR OPTION 6J3
VEHICLE GRILLE LAMPS AND SPEAKER/SIREN

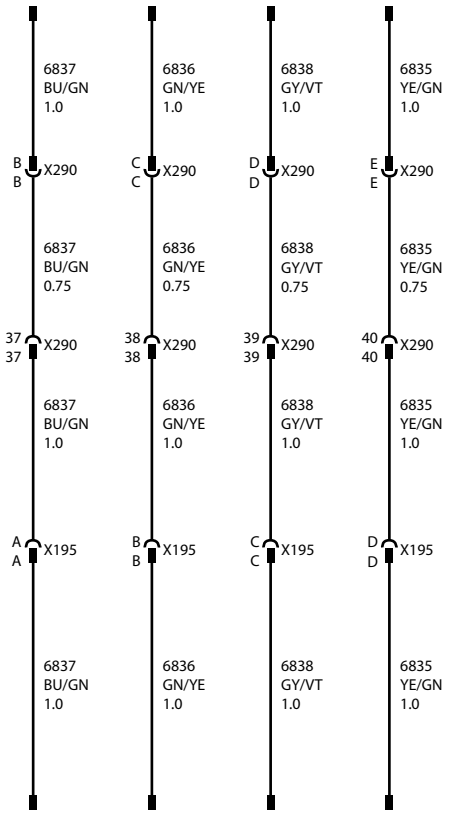

PACKAGED UNDERHOOD BY RIGHT REAR BATTERY

WIRES FOR SIREN | WIRES FOR GRILL LAMPS

WIRING DIAGRAM FOR WINDSHIELD PILLAR-MOUNTED SPOTLAMP - OPTION 7X6 AND 7X7

WINDSHIELD PILLAR-MOUNTED SPOTLAMPS
OPTION 7X6 LH ONLY / OPTION 7X7 LH AND RH

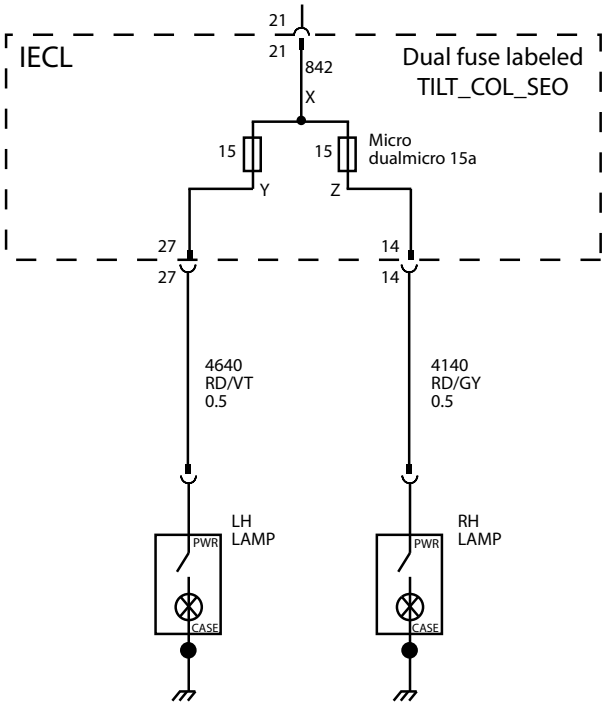

IECL - INTERMEDIATE ELECTRICAL CENTER-LEFT

LAMP BULBS - HALOGEN H7635

NOTE: Wiring diagrams for these options are shown in the Police Package owner's manual supplement (shipped in glove box).

WIRING

WIRING PROVISION FOR OPTION 6J7 EXTERIOR LAMPS EMERGENCY FLASHING SYSTEM

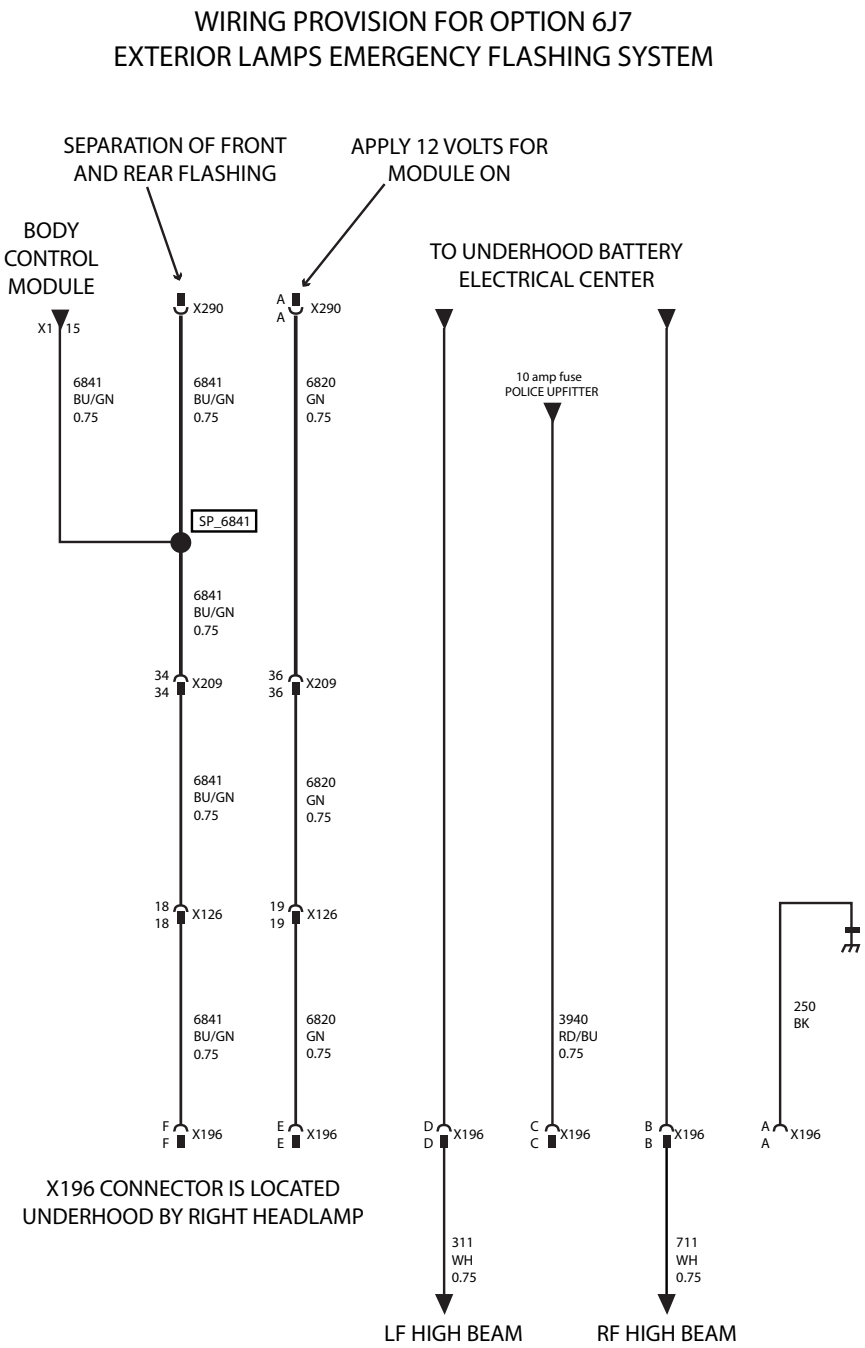

NOTE: Wiring diagrams for these options are shown in the Police Package owner's manual supplement (shipped in glove box).

WIRING

WIRING DIAGRAM FOR OPTION 6J4 IN-LINE CONNECTOR

WIRING PROVISION FOR OPTION 6J4, HORN - SIREN CIRCUIT

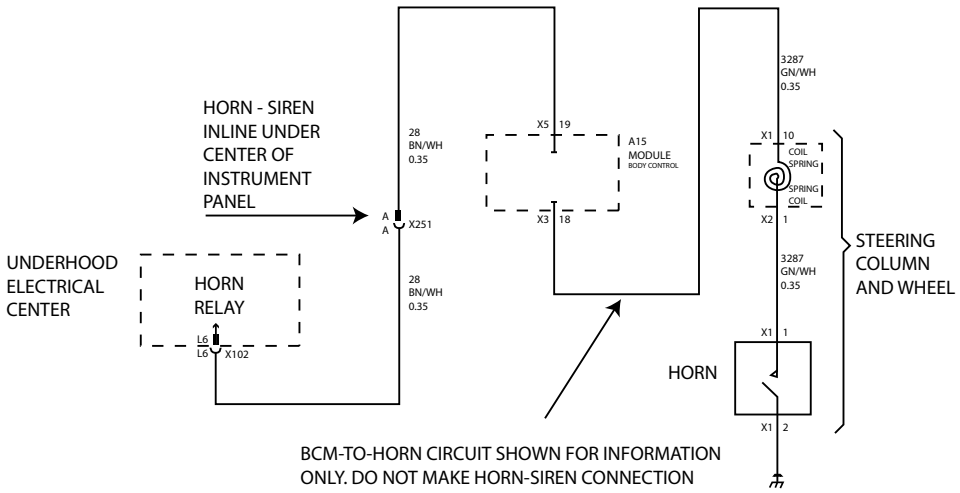

BCM-TO-HORN CIRCUIT SHOWN FOR INFORMATION ONLY. DO NOT MAKE HORN-SIREN CONNECTION BETWEEN HORN AND BCM.

WIRING DIAGRAM FOR OPTION WX7 IN-LINE CONNECTOR

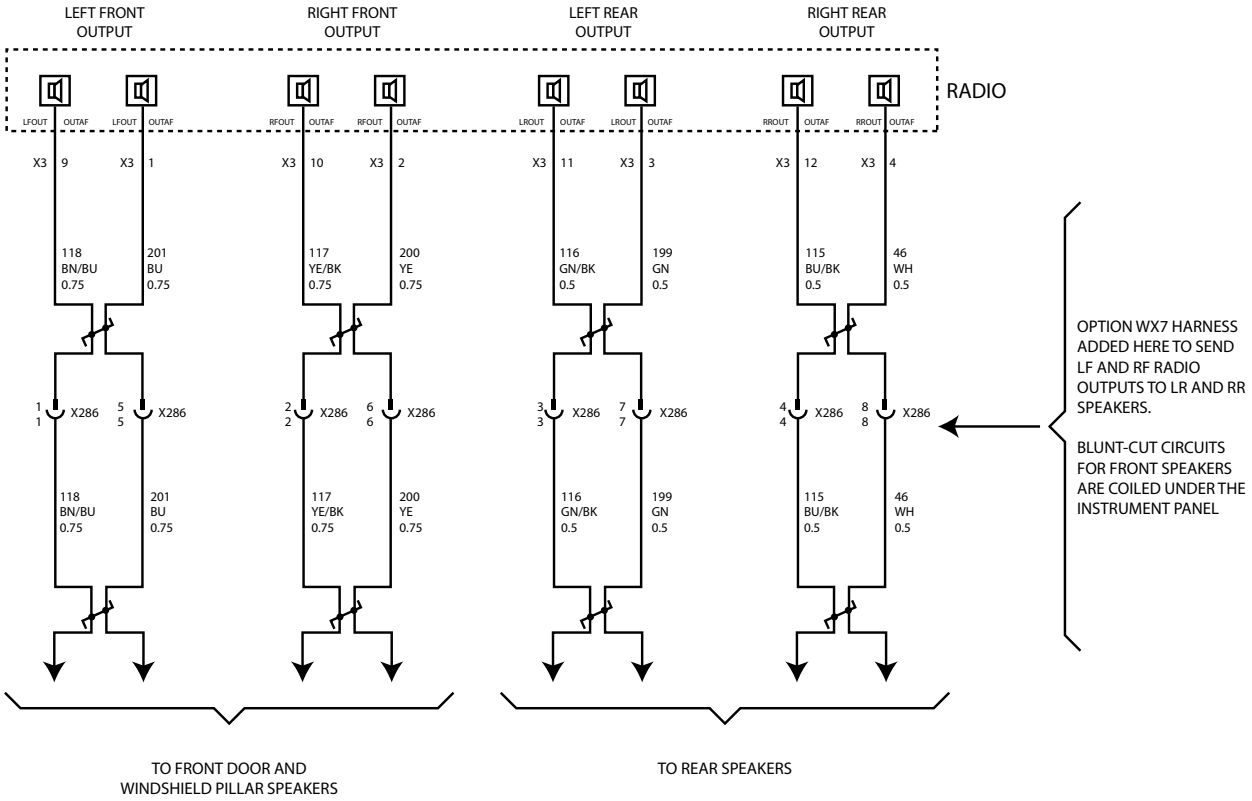

NOTE: Wiring diagrams for these options are shown in the Police Package owner's manual supplement (shipped in glove box).

Can specialty vehicle equipment (e.g. radar devices, video cameras, computers, meters, radio trees, shotguns, etc.) still be mounted in cars with passenger side air bags?

Yes, but care must be taken to mount the equipment outside of the deployment zone. Air bags inflate with great force and will interact with any object in the deployment zone. Therefore, to reduce the risk of injury to vehicle occupants, GM recommends that the air deployment zone be kept free of any equipment. If a piece of equipment were to become dislodged it could strike an occupant in the vehicle and result in injury. The likelihood of an object becoming dislodged is influenced by many factors, including the proximity of the object to the inflatable restraint, the size and shape of the object, and the means by which the object is secured to the vehicle. In addition to these factors, the trajectory and velocity of a dislodged object can be influenced by the type and severity of vehicle crash.

Objects that are in the deployment zone, but do not become dislodged by an inflating air bag can still affect the performance of the air bag. For example, such objects could tear the fabric or affect the shape of the air bag, thus reducing the ability of the bag to provide restraint.

Is it possible to shield equipment that is installed in the passenger side frontal air bag deployment zone in a manner that will allow full and safe air bag deployment?

Due to the complexity of influencing variables, GM is unable to evaluate the potential for shielding expected equipment configurations in all accident scenarios in order to assure that the air bag performance would be unaffected. While shielding may protect certain equipment from being damaged or dislodged, it may also negatively affect the inflation characteristics of the air bag. The air bag's shape, inflation angle, fold pattern, and inflation rate and pressure are developed to maximize the protection capability of the inflatable restraint system. Therefore, GM cannot recommend the placement of any equipment in the deployment zone, even if it is shielded to protect it from damage.

Front air bag systems and instrument panel mounted equipment.

Passenger air bags in GM vehicles deploy in different ways depending upon the type of vehicle and the particular instrument panel design.

In some vehicles, the passenger air bag deploys through a discrete door located on the top surface of the instrument panel (top-mount air bag systems). In other vehicles, such as the Chevrolet Tahoe, the passenger air bag deploys through a discrete door mounted on the vertical rearward surface of the instrument panel, above the glove box door (mid-mount air bag system). With these types of top-mount and mid-mount passenger air bag systems, the top pad of the instrument panel remains in place during deployment.

Some GM passenger air bag systems, like the system in the Chevrolet Impala, deploy from beneath the instrument panel top pad. These are considered 3/4-mount air bag systems with a "deployable top pad." The entire instrument panel top pad is the "deployment door" from under which the inflating air bag emerges. When an air bag deployment is commanded, the forces from the inflating passenger air bag push up on the instrument panel top pad, releasing special fasteners across the rearward edge of the top pad. This allows the top pad to rotate upward so that the passenger air bag may emerge. The top pad rotates upward to open widest at the right hand side, and is usually forced upward into contact with the windshield on the right hand side of the vehicle during a deployment.

Instrument panel top mounted special equipment, such as a radar antenna and control unit or video camera must be positioned to the left of the vehicle center line. This equipment must be mounted as low as possible and securely fastened to the top pad to avoid being dislodged in the event of a crash and possible air bag deployment. In the process of securely fastening special equipment to the top, DO NOT fasten down the top pad itself to any other vehicle component such as the cluster trim plate. As described above, the top pad rotates upward during a deployment. In order to enable the proper deployment of the passenger air bag, specialty equipment installation MUST NOT PREVENT the top pad from rotating upward during deployment. Location and attachment of special equipment should minimize added resistance or interference to upward rotation of the top pad during deployment.

Side-Impact Air Bags for crashes to the vehicle sides.

The air bag system in your police vehicle includes roof rail mounted Head Curtain side air bags. The vehicle is also equipped with seat back mounted upper body air bags located on the outboard side of the driver and front passenger seat backs. Together the Head Curtain and seat-mounted side air bags are intended to protect the head and upper body in the event of a side crash. Some vehicles may also be equipped with an optional air bag, mounted on the inboard side of the driver seat back.

Can Specialty Vehicle Security Barriers be mounted within the side air bag deployment zones?

No. The side air bags inflate extremely fast because of the nature of side crashes to the vehicle. Mounting a security barrier behind the front seats with the ends placed within the side air bag deployment zones will result in unintended interaction between the barrier and the inflating side air bags. To reduce the risk of injury to the vehicle occupants, GM recommends that the side air bag zones be kept free of any customer installed equipment.

Customer furnished equipment installed to the vehicle roof.

Your police vehicle is designed with an interior roof cover system which includes internal components for the interior lamps and wiring. The roof system may also include side air bag components. Inflation devices may be mounted on the vehicle roof side behind the rear doors as well as air bag tethers retained to the windshield pillars. Care must be taken to avoid damage to these components or interference with their operation when installing roof mounted equipment such as emergency lamps and communication antennas.

Recommended GM service procedures must be followed to remove and re-install the instrument panel top pad to ensure that the top pad will release properly in the event of a passenger air bag deployment.

On the right half of the top pad closest to the passenger air bag module, GM recommends that no equipment be mounted. When mounting equipment on the driver side of the top pad, GM recommends that the total mass of the top pad mounted special equipment not exceed 8 pounds (3.6 kilograms), since some top pads tend to rotate about the left end.

Fasteners used to secure special equipment to the instrument panel top pad, the windshield glass, or to the windshield upper frame (header), should be selected to ensure that these devices will remain attached during a vehicle crash and possible air bag deployment.

Head curtain side air bags are designed to help reduce the risk of head and neck injuries to front and rear seat occupants on the near side of certain side-impact collisions. Always use safety belts and the correct child restraints for your child's age and size, even in vehicles equipped with air bags. Children are safer when properly secured in a rear seat. See your vehicle Owner's Manual and child safety seat instructions for more information.

Can the installation of push bumpers on the front end of the vehicle affect the deployment of the air bag?

General Motors is not aware of adverse effects during crash events from the many push bumpers that have been installed on GM police vehicles. Because there are many styles of push bumpers available with varying crash characteristics, installation of push bumpers may or may not affect deployment timing of the air bags. Push bumpers should be mounted to avoid modifying the vehicle structure and interfering with the front air bag sensors mounted on the upper radiator support cross member.

Two front impact sensors are installed in General Motors vehicles. Do not relocate or disconnect the front sensors. The location and orientation of the front sensors are critical for correct operation of the air bag system. Avoid mounting components on or near the sensors. Push bumper styles with vertical pushing members that are in foreaft alignment with the front air bag sensors are not recommended.

When should an air bag inflate?

The driver's and right-front passenger's frontal air bags are designed to inflate in moderate to severe frontal or near-frontal crashes. But they are designed to inflate only if the impact speed is above the system's designed "threshold level."

In addition, your vehicle has “dual stage” frontal air bags which tailor the the amount of restraint according to crash severity. For moderate frontal impacts, the air bags inflate at a level less than full deployment. For more severe frontal impacts, "dual stage" frontal air bags deploy at full levels.

If the front of your vehicle goes straight into a wall that doesn't move or deform, the threshold level of the reduced deployment is about 12 to 16mph (19 to 15 km/h), and the threshold level for a full deployment is about 18 to 24 mph (29 to 28.5 km/h). The threshold level can vary, however, with specific vehicle design, so that it can be somewhat above or below this range.

If your vehicle strikes something that will move or deform such as a parked car, the threshold level will be higher. The driver's and right-front passenger's frontal air bags are not designed to inflate in rollover, side impacts, or rear impacts, because inflation would not help the occupant.

Seat mounted side impact air bags are designed to inflate in moderate to severe side crashes. The side impact air bags will inflate if the crash severity is above the designed "threshold level." The threshold level can vary with specific vehicles design. The side impact air bags are not designed to inflate on frontal or near-frontal impacts or rear impacts, because inflation would not help the occupant.

Roof rail mounted head-curtain air bags are designed to inflate in moderate to severe side crashes. In addition, certain vehicles have head-curtain air bags which are also designed to inflate in situations where an impending rollover condition is identified by the vehicle's rollover sensing system and/or frontal or near-frontal impacts if the crash severity is above the designed "threshold level."

Safety belt pretensioners at the driver and front passenger seat positions are designed to deploy in frontal, near-frontal, side, and rear crashes that exceed the "threshold level" of crash severity to help reduce slack in the safety belt. Safety belt pretensioners will also deploy in impending rollover situations.

How long will the air bag remain inflated?

It takes approximately 1/20th of a second to fully inflate the frontal air bags. This is faster than the blink of an eye. The air bags begin to deflate immediately, helping to stop the occupants more gradually.

I've heard that a deployed air bag produces what appears to be smoke, is the air bag hot?

After the bag has deployed in a crash, the air bag itself will not be hot to touch. Some components within the air bag module will be hot for a short time. A small amount of smoke coming from a deployed air bag module is normal and should not be cause for concern.

Also, when the nitrogen gas is vented out of the air bag, small particles from inside the bag are also vented into passenger compartment. These airborne particles look like smoke and some particles are deposited as residue on and around the air bag.

I've heard that the dusts that are released into the passenger compartment from the air bag are harmful, is this true?

For most people, the only effect the dusts will produce is some irritation of the throat and eyes, and that is only if the occupant remains in the vehicle for many minutes after the air bag deployment with no ventilation and windows closed. However, some people with asthma may develop an asthmatic attack from inhaling the dusts. If this happens, they should first treat themselves the same way their doctor has advised them to treat any other asthma attack, and then immediately seek medical treatment.

Can the air bag system be re-used?

No, The air bags are designed to inflate only once. After inflation some new parts will be required. These will include the air bag module and possibly other parts. (A competent service technician with access to the vehicle's service manual and the required tools should replace the required components after a deployment crash.)

If my vehicle has air bags, why should I have to wear my safety belt?

Air bags are in many vehicles today and will be in most of them in the future. But they are supplemental systems only; so they work with safety belts not instead of them. Every air bag system ever offered for sale has required the use of safety belts. Even if you're in a vehicle that has air bags, you still have to buckle up to get the most protection. That's true not only in frontal collisions but especially in side and other collisions.

TOP VIEW OF INSTRUMENT PANEL AND APPROXIMATE DEPLOYMENT AREA OF THE AIR BAG ZONE

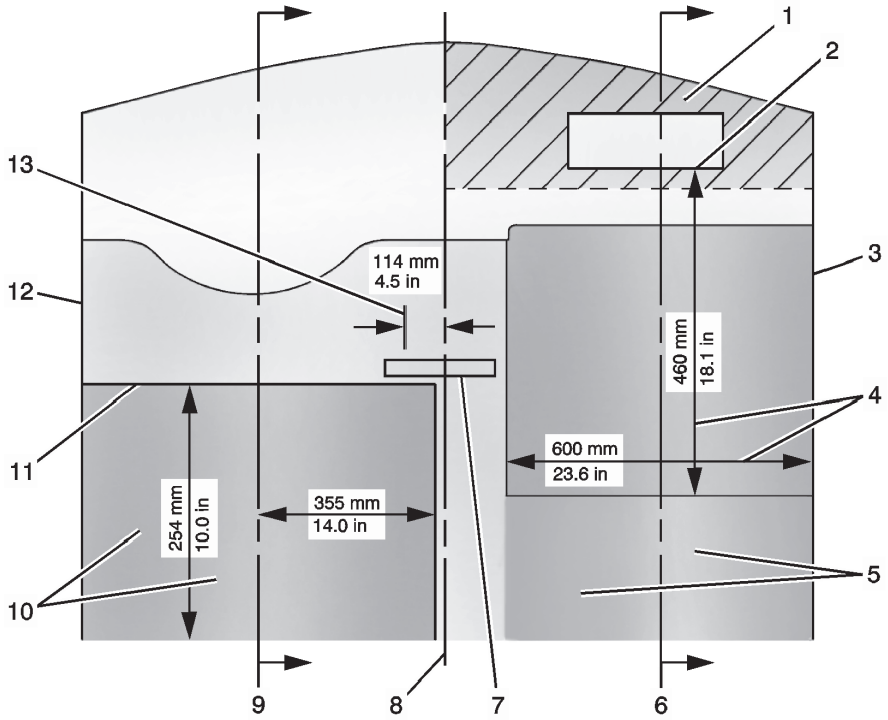

1. Passenger Side Instrument Panel Top Surface Zone
2. Passenger Frontal Airbag Module Trim Panel – Rear Edge
3. Passenger Side Door
4. Approximate Dimensions of Inflated Airbag
5. Passenger Frontal Airbag Deployment Zone
6. Passenger Centerline
7. Inside Rearview Mirror
8. Vehicle Centerline
9. Driver Centerline
10. Driver Frontal Airbag Deployment Zone
11. Front of Steering Wheel
12. Driver Side Door
13. Shift Selector Arc

Air bag inflation can cause severe injury or death to anyone too close to the bag when it deploys. Be sure every occupant is properly restrained.

SIDE VIEW OF DRIVER FRONTAL AIRBAG DEPLOYMENT ZONE

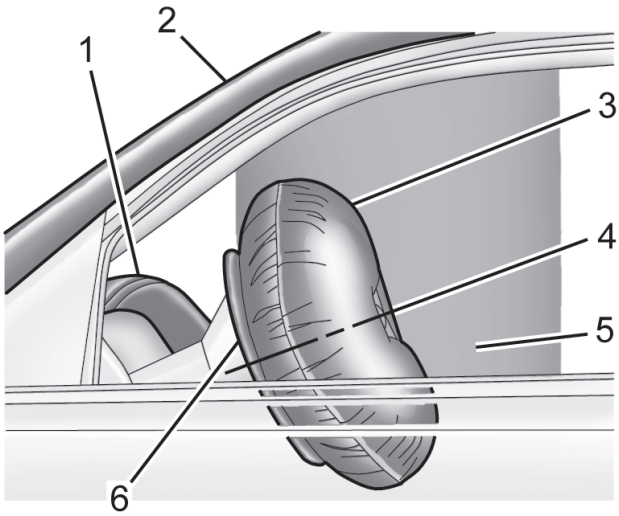

1. Top of Instrument Panel
2. Top Edge of Windshield
3. Inflated Airbag – Steering Wheel
4. Centerline of Steering Column at Mid-Tilt
5. Driver Frontal Airbag Deployment Zone
6. Front of Steering Wheel

SIDE VIEW OF PASSENGER FRONTAL AIRBAG DEPLOYMENT ZONE

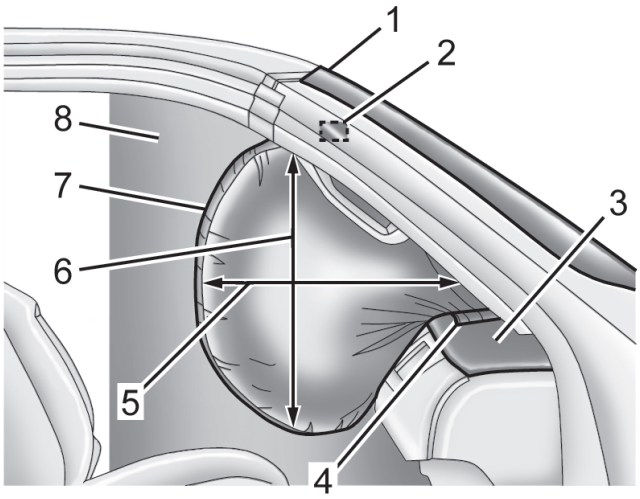

1. Top Edge of Windshield
2. Inside Rearview Mirror
3. Instrument Panel Top Surface Zone
4. Passenger Frontal Airbag Module Trim Panel – Rear Edge
5. Inflated Airbag – Horizontal Dimension, approximately 18.1 in (460 mm)
6. Inflated Airbag – Vertical Dimension (from Top of Occupant's Lap to Headliner)
7. Inflated Airbag – Instrument Panel
8. Passenger Frontal Airbag Deployment Zone

Air bag inflation can cause severe injury or death to anyone too close to the bag when it deploys. Be sure every occupant is properly restrained.

ROOF-RAIL AND SEAT-MOUNTED SIDE IMPACT AIRBAG DEPLOYMENT ZONES - PASSENGER SIDE SHOWN, DRIVER SIDE SIMILAR

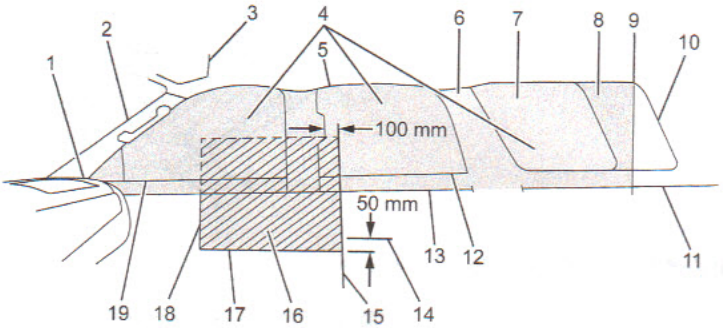

1. Front of Deployment Zone at Bottom of Windshield Pillar Trim
2. A-Pillar Trim with Grab Handle (Passenger Side)
3. Sun Visor
4. Deployment Zone - Seat Rows 1 and 2 and Cargo Area
5. Top of Deployment Zone - Along Roof-rail at Edge of Headliner
6. C-Pillar Upper Trim
7. Rear Quarter Window
8. D-Piliar Upper Trim
9. Rear of Cargo Area Zone at Back Corner of Headliner
10. Rear of Vehicle at liftgate Opening
11. Bottom of Cargo Area Zone at Rear Side Trim Cupholders
12. Top Edge of Rear Door Trim
13. Bottom of Deployment Zone at Top of Side Door Armrests
14. Top Surface of Front Seat Cushion (with Seal Fully lowered)
15. Seat-Mounted Side Impact Airbag Deployment Zone 3.9 in (100 mm) to Rearward of Back Edge of B-Pillar Trim Grab Handle)
16. Lower Part of Front Seat Deployment Zone (With Seat Fully Lowered)
17. Bottom of Seat-Mounted Side Impact Airbag Zone 2.0 in (50 mm) Below Top of Seat Cushion with Seat Fully lowered)
18. Rear of Front Door Trim Armrest Handle
19. Top Edge of Front Door Trim

The roof-rail airbag deploys in the cargo area. Third-row seating is not available on the police package (RPO 9CI) or the special service package (RPO 5W4).

ROOF-RAIL AND SEAT-MOUNTED SIDE IMPACT AIRBAG DRIVER AND PASSENGER DEPLOYMENT ZONES - VIEW FROM REAR CARGO AREA

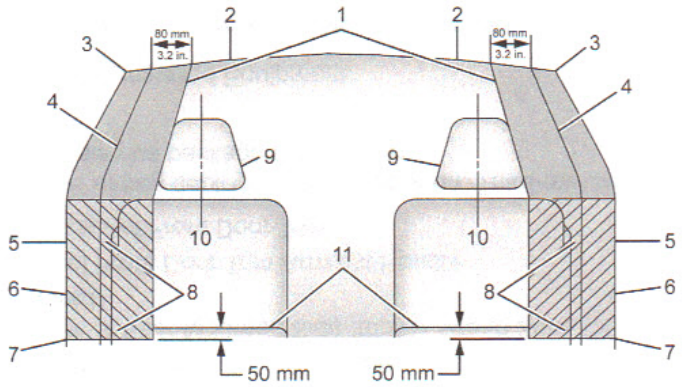

1. Roof-rail Airbag Deployment Zone
2, Underside of Headliner
3. Edge of Headliner
4. Inner Center and Rear Pillar Trim
5. Inner Front and Rear Door
6. Side Door Upper Armrests and Rear Quarter Trim Armrests
7. Seat-Mounted Side Impact Airbag Deployment Zone 2.0 in (50 mm) Below Top Surface of Outboard Front Seat Cushion with Seat Fully Lowered.
8. Front Seatback Side Deployment Zone
9. Front Seat Head Restraint
10. Seat Centerline
11. Top of Seat Cushion

The driver and passenger seat-mounted side impact airbag deployment zones move up, down, fore, aft, as the seat is adjusted by the occupant. The deployment zones also move as the seatback is reclined and raised.

Air bag inflation can cause severe injury or death to anyone too close to the bag when it deploys. Be sure every occupant is properly restrained.

OPTIONAL DRIVER SEATBACK FRONT CENTER AIRBAG (RPO AYQ AND D07) INCLUDED WITH A95 BUCKET SEATS – VIEW FROM PASSENGER SIDE

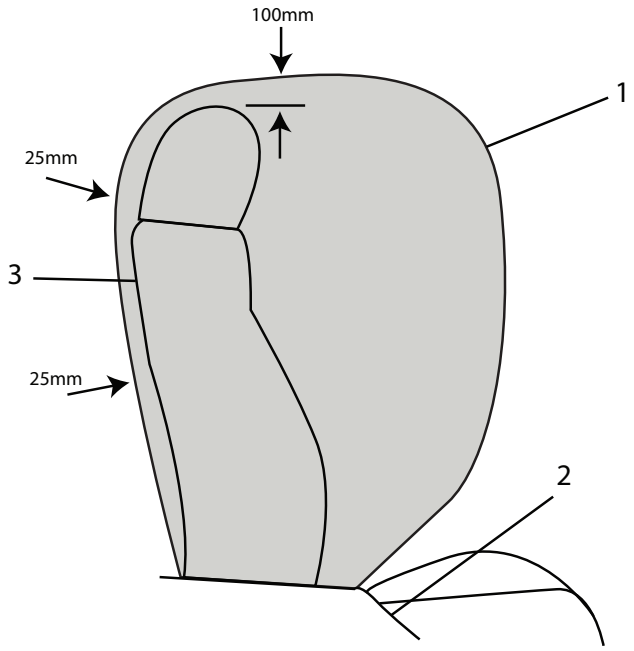

1. Driver Seatback Front Center Airbag
2. Front Center Console
3. Driver Seat and Head Restraint

The deployment zones for the driver seatback front center airbag and the driver and passenger seat-mounted side impact airbags move up, down, fore, and aft as the seat is adjusted by the occupant.

The driver seatback front center airbag (RPO AYQ) requires front bucket seats (RPO A95) and the front center console (RPO D07). Do not remove the front center console to install customer equipment or install customer equipment between the front bucket seats. The equipment may interfere with the deployment of the driver seatback front center airbag.

OPTIONAL DRIVER SEATBACK FRONT CENTER AIRBAG DEPLOYMENT ZONE (RPO AYQ AND D07) – VIEW FROM REAR CARGO AREA

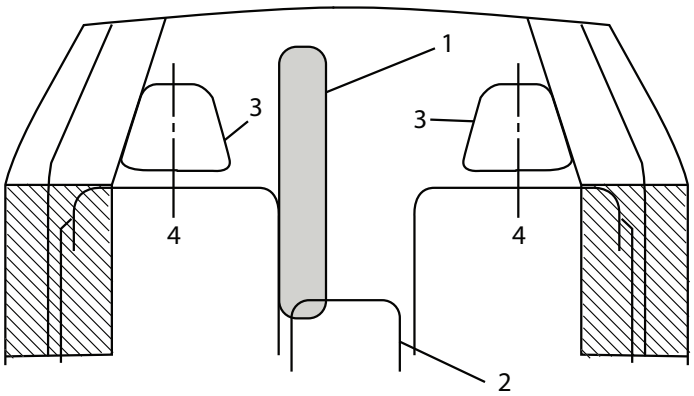

1. Driver Seatback Front Center Airbag (RPO AYQ)
2. Front Center Console (RPO D07)
3. Front Seat Head Restraint
4. Seat Centerline

Air bag inflation can cause severe injury or death to anyone too close to the bag when it deploys. Be sure every occupant is properly restrained.

ELECTRONIC STABILITY CONTROL SYSTEM (STABILITRAK)

StabiliTrak systems help drivers maintain control of their vehicles, especially during emergency lane changes or avoidance maneuvers. StabiliTrak uses various sensors, such as steering wheel angle, wheel speed, yaw velocity, etc., to detect any difference between the path requested by the steering wheel position and vehicle's actual path. When appropriate, the system selectively controls brakes, engine power, and even suspension settings to enhance control of the vehicle's direction and help keep it on course.

Independent studies conducted by the National Highway Traffic Safety Administration, the Insurance Institute for Highway Safety, and others have found StabiliTrak to be highly effective in reducing vehicle crashes. General Motors offers StabiliTrak systems on many of its passenger car and light truck models.

See your owner's manual for additional information about the operation of StabiliTrak.

Q. How do I use StabiliTrak?

A. StabiliTrak operates independently of the driver. You should continue to drive your StabiliTrak equipped vehicle with caution and care. GM's StabiliTrak system, StabiliTrak is designed to be as seamless as possible in operation, and part of the overall vehicle response to make a good vehicle better

Q. How does StabiliTrak work?

A. StabiliTrak has the ability to apply control forces to the vehicle independent of the driver. StabiliTrak uses sensors to continuously compare the path indicated by the steering wheel position to the vehicle's actual path. If a discrepancy is detected, StabiliTrak selectively controls vehicle brakes and engine torque to create a yaw moment that helps restore the vehicle's actual path to the path indicated by the steering wheel position. StabiliTrak has the ability to help correct both understeer (where the vehicle is not turning as much as the steering wheel position indicates) and oversteer (where the vehicle is turning more than the steering wheel position indicates).

Q. Will a tire change affect StabiliTrak?

A. Use of tires other than original equipment may affect StabiliTrak performance. StabiliTrak is designed to make the best use of available traction. The performance characteristics of the original equipment tires are part of the overall system effectiveness. When you replace tires check the recommendations in your owner's manual. On GM vehicles, the original equipment tires have a "TPC" (Tire Performance Criteria) code on the sidewall. Replacing the tires with the same "TPC" code will help assure proper StabiliTrak performance.

DRIVER OPERATED STABILITRAK BUTTON

An advanced computer controlled stability enhancement system assists the driver with directional control of the vehicle in difficult driving conditions. Each time the vehicle is started, the StabiliTrak system is fully on. StabiliTrak can be controlled by a button located on the left side of instrument panel. The condition system is displayed by a StabiliTrak indicator light and Driver Information Center (DIC) Message. Push once to disable Traction Control. Push and hold to disable both Traction Control and StabiliTrak. In this condition, StabiliTrak will automatically turn ON when the vehicle speed exceeds 35 mph (56km/hr) while the Traction Control remains OFF. Push again to enable Traction Control and StabiliTrak.

MAINTENANCE/WARRANTY

MAINTENANCE	2-year/24,000-mile of scheduled maintenance that includes oil and filter changes, tire rotations and multipoint vehicle inspections. Covers only scheduled oil changes with filter and tire rotations according to your new vehicle's recommended maintenance schedule for up to 2 years or 24,000 miles, whichever comes first. Does not include air filters. Maximum of four service events. See participating dealer for other restrictions and complete details.
WARRANTY	Bumper-to-Bumper (including tires): Coverage is for the first 3 years or 36,000 miles, whichever comes first.
SHEET METAL	All body and sheet metal components are warranted against corrosion for 3 years or 36,000 miles, whichever comes first. Plus you're protected even further from rust-through corrosion for a minimum of 6 years/100,000 miles (whichever comes first). Application of additional rust-inhibiting materials is not required under the corrosion coverage and none is recommended. See your GM dealer for terms of this limited warranty. Covered for 3 years/36,000 Miles GM is committed to ensuring satisfaction with your new vehicle. Your dealer also wants you to be completely satisfied and invites you to return for all your service needs, both during and after the warranty period. To help keep things in proper working order, Chevrolet will warrant each 2012 model year Chevrolet passenger car, light-duty truck, crossover or van for 3 years or 36,000 miles (whichever comes first; see dealer for details) with no deductible, from the original in-service date of the vehicle, for warrantable repairs that are required as a result of defects due to material and/or workmanship to the powertrain components.
POWERTRAIN	In addition to the 3-year/36,000 mile protection, many of your powertrain components are protected even further with coverage extending to 5 years or 100,000 miles, whichever comes first.
ENGINE	Engine coverage includes all internally lubricated parts, engine oil cooling hoses, and lines. Also included are all actuators and electrical components internal to the engine (e.g., Active Fuel Management valve, lifter and oil manifold) cylinder head, block, timing gears, timing chain, timing cover, oil pump/oil pump housing, OHC carriers, valve covers, oil pan, seals, gaskets, manifolds, flywheel, water pump, harmonic balancer, engine mount, turbocharger, and supercharger. Timing belts are covered until the first scheduled maintenance interval. Exclusions: Excluded from the powertrain coverage are sensors, wiring, connectors, engine radiator, coolant hoses, coolant, and heater core. Coverage on the engine cooling system begins at the inlet to the water pump and ends with the thermostat housing and/or outlet that attaches to the return hose. Also excluded is the starter motor, entire pressurized fuel system (in-tank fuel pump, pressure lines, fuel rail(s), regulator, injectors, and return line), as well as the Engine/ Powertrain Control Module and/or module programming.
TRANSMISSION/ TRANSAXLE	Transmission and transaxle coverage includes all internally lubricated parts, case, torque converter, mounts, seals and gaskets, as well as any electrical components internal to the transmission/transaxle. Also covered are any actuators directly connected to the transmission (slave cylinder, etc.). Exclusions: Exclusions from the powertrain coverage include cooling lines, hoses, radiator, sensors, wiring, and electrical connectors. Also excluded are the clutch and pressure plate, as well as any Transmission Control Module and/or module programming.
TRANSFER CASE	Transfer case coverage includes all internally lubricated parts, case, mounts, seals and gaskets, as well as any electrical components internal to the transfer case. Also covered are any actuators directly connected to the transfer case, as well as the encoder motor. Exclusions: Excluded from the powertrain coverage are transfer case cooling lines, hoses, radiator, sensors, wiring, and electrical connectors, as well as the transfer case control module and/or module programming.
DRIVE SYSTEMS	Drive system coverage includes all internally lubricated parts, final drive housings, axle shafts and bearings, constant velocity joints, propeller shafts and universal joints. All mounts, supports, seals, and gaskets, as well as any electrical components internal to the drive axle. Also covered are any actuators directly connected to the drive axle (e.g., front differential actuator). Exclusions: Excluded from the powertrain coverage are all wheel bearings, drive wheel front and rear hub bearings, locking hubs, drive system cooling, lines, hoses, radiator, sensors, wiring, and electrical connectors related to drive systems, as well as any drive system control module and/or module programming.
TIRES	The tires supplied with your vehicle are covered by General Motors against defects in material or workmanship under the Bumper-to-Bumper Limited Warranty coverage. Wear-out is not considered a defect, and it may occur before the vehicle warranty expires. In this case, the owner is responsible for purchasing replacement tires, or seeking coverage solely from the tire manufacturer. For vehicles within the Bumper-to-Bumper Limited Warranty coverage, defective tires will be replaced on a prorated adjustment basis according to the mileage-based schedule in your Warranty and Owner Assistance Information booklet. After your New-Vehicle Limited Warranty expires, you may still have prorated warranty coverage on your original equipment tires by the tire manufacturer.

MAINTENANCE/WARRANTY (continued)

EMISSION CONTROL SYSTEMS	Defects and performance for car and light-duty truck emission control systems are covered for the first 2 years or 24,000 miles, whichever comes first. From the first 2 years or 24,000 miles to 3 years or 36,000 miles defects in material or workmanship continue to be covered under the New Vehicle Limited Bumper-to-Bumper Warranty coverage. Specified major components are covered for the first 8 years or 80,000 miles, whichever comes first. Defects and performance for heavy duty truck emission control systems including those found in 6.6L Duramax® Diesel Engines are covered for the first 5 years or 50,000 miles, whichever comes first. - Refer to your Warranty and Owner Assistance Information booklet for California emission control system warranty details.
TOWING	Towing is covered to the nearest Chevrolet dealer if your vehicle cannot be driven because of a warranted defect.
ADDITIONAL COVERAGE	Chevrolet 2-Year Scheduled Maintenance Chevrolet 2-Year Scheduled Maintenance coverage is included with the purchase or lease of new 2014 Chevrolet models. Chevrolet 2-Year Scheduled Maintenance includes only the following: 2-year/24,000-mile Scheduled Maintenance (whichever comes first; up to a total of four service events): ACDelco dexos1®Oil and ACDelco Oil Filter Change (excludes Spark EV) 4-wheel Tire Rotation (excludes dual rear wheel vehicles, all Corvette models and select Camaro models - ZL1 model and 1LE package cars – due to their unidirectional tires; see Owner's Manual for details) 27-Point Vehicle Inspection (MPVI)
COURTESY TRANSPORTATION PROGRAM	If your vehicle requires warranty repairs during the 5-year/100,000-mile coverage period (8 years/100,000 miles for the Volt, Tahoe Hybrid, and the Silverado Hybrid vehicles), alternate transportation and/or reimbursement of certain transportation expenses may be available under the Courtesy Transportation Program. Several transportation options are available. Consult your dealer or refer to the Owner's Manual for details. Courtesy Transportation is not part of or included in the coverage provided by the New-Vehicle Limited Warranty. General Motors reserves the right to make any changes or discontinue the Courtesy Transportation program at any time without notification.
ROADSIDE ASSISTANCE PROGRAM	Chevrolet is proud to offer the response, security and convenience of the 24-Hour Roadside Assistance Program for a period of 5 years or 100,000 miles, whichever comes first. The program provides you with the following services during the New-Vehicle Limited Warranty period: Emergency Towing (to closest Chevy dealer from a legal roadway) Lockout Service (keys locked inside vehicle) Flat Tire Changes (spare installed) Fuel Delivery ($5 worth of fuel delivered on the road) Jump-Starts (at home or on the road) Refer to your Owner's Manual for details, including reservation of rights, or consult your dealer/retailer. --For specific terms and conditions, please contact your Chevrolet Roadside Assistance Program advisor at 1-800-243-8872.
WHAT IS NOT COVERED	All the above items are not covered for damage due to accident, misuse, alteration, insufficient or improper maintenance, contaminated or poor-quality fuel or environmental and chemical exposure. Medium-duty trucks, including the C4500, are excluded from this powertrain coverage. For complete details, refer to your Warranty and Owner Assistance Information booklet. This is a supplement to the express conditions and warranties described in the Warranty and Owner Assistance Information booklet. Other coverages are not extended or altered due to this supplement.Passenger car, light-duty truck, crossover and van owners requiring a more comprehensive coverage than what is provided with the New-Vehicle Limited Warranty are encouraged to consider a Chevrolet Protection Plan. This plan is available through Chevrolet dealerships. For more information, see the Extended Protection section on - http://www.chevrolet.com/owners/warranty.html.
ALTERATIONS AND WARRANTIES	AN IMPORTANT NOTE ABOUT ALTERATIONS AND WARRANTIES. Installations or alterations to the original GM-equipped vehicle (or chassis) are not covered by the General Motors New Vehicle Limited Warranty. The special body company, assembler, equipment installer or upfitter is solely responsible for warranties on the body or equipment and any alterations (or any effect of the alterations) to any of the parts, components, systems or assemblies installed by GM. General Motors is not responsible for the safety or quality of design features, materials or workmanship of any alterations by such suppliers.

- Care must be taken during customer installation of equipment and wiring to ensure that all holes drilled in the body are corrosion protected, properly sealed and that vehicle wiring harnesses, piping or other components have not been displaced or damaged. Aftermarket equipment installers must be mindful of applicable Federal Motor Vehicle Safety Standards. This information can be obtained directly from the National Highway Traffic Safety Administration.

- These vehicles are equipped with an air bag system. The air bag system in your police vehicle includes front seat back, front knee and side curtain air bags. Customer installed equipment such as security barriers behind the front seats should not be mounted so that the barrier ends are within the side air bag deployment zones. The sensors and other components for the air bag system must not be relocated to accommodate the installation of customer furnished equipment; please refer to the service manual for sensor and other component locations. For information concerning instrument panel top pad mounted equipment and air bag system deployment zones, see the air bag information section in this catalog.

- This catalog is not updated during the model year and should not be used for ordering purposes. It is intended as a source of basic information. All illustrations and specifications in this literature are based on the latest product information available at the time of publication. General Motors reserves the right to make changes at any time without notice. For further details, consult your local dealer.

- A note about vehicle alterations by independent suppliers: This catalog shows pictures of vehicles that have been altered or upfitted with equipment or components supplied to Chevrolet or its dealers by independent suppliers. Chevrolet is not responsible for the safety or quality of design features, materials or workmanship of any alterations by a supplier.